NASSAU COUNTY TYPICAL 63' ROW UTILITY LOCATION PLAN

ALL UTILITIES TO BE INSTALLED BELOW DRAINAGE SYSTEM UNLESS APPROVED OTHERWISE BY ENGINEERING SERVICES
ALL UTILITIES INSTALLED BELOW PAVEMENT MUST HAVE A MINIMUM COVER OF 36"

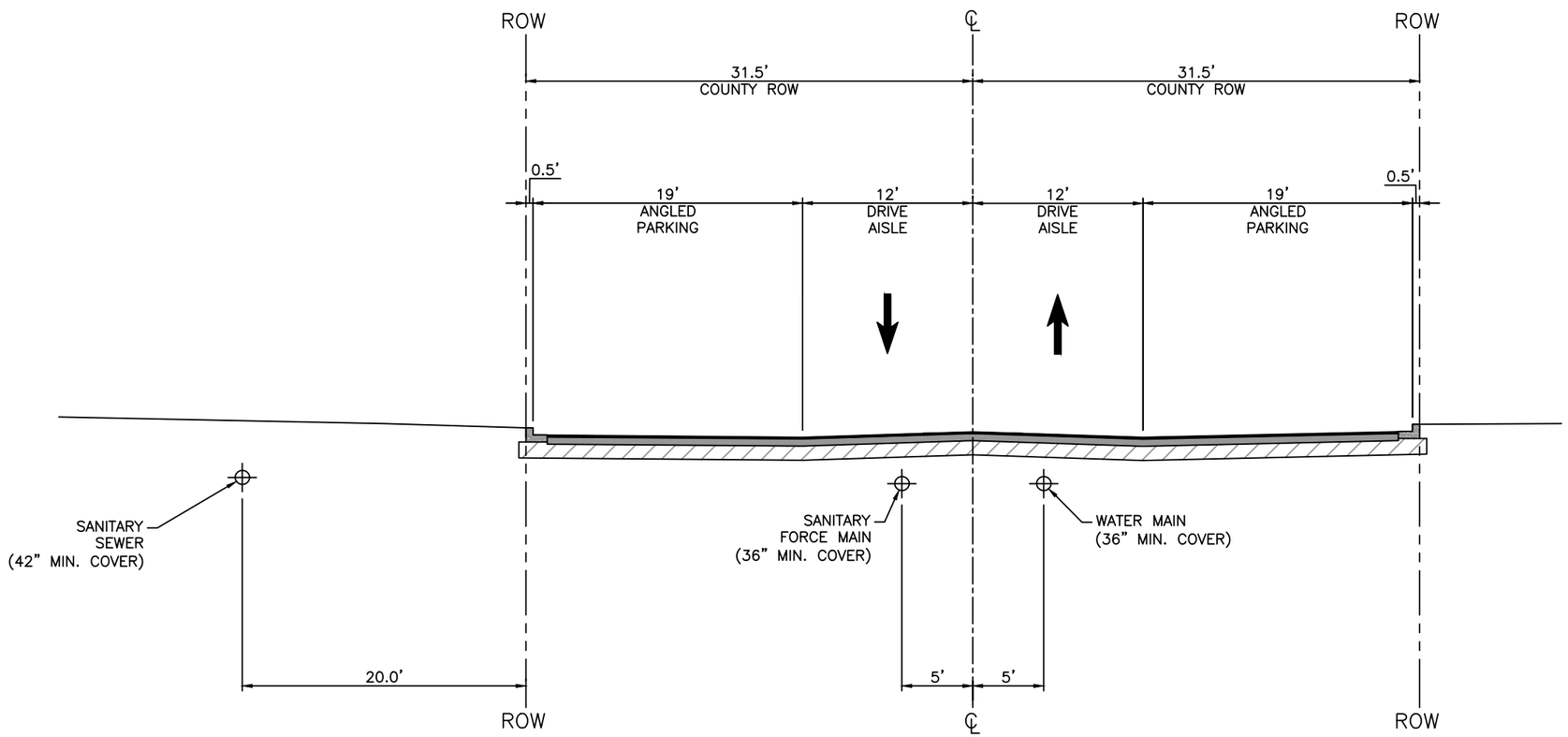

N.T.S.

TOCOI Engineering, LLC
714 NORTH ORANGE AVENUE, GREEN COVE SPRINGS, FL 32043
PH: 904-215-1388 E.B. NUMBER: 26383

ENGINEER OF RECORD
CHARLES SOHM
FLORIDA
REGISTRATION NUMBER:
79289

TYLER PLAZA WEST
FOR
TYLER PLAZA WEST, LLC

JEA UTILITY DETAILS

REVISIONS

PLOT DATE:
DRAWN BY:
DESIGNED BY:
CHECKED BY:
SCALE:
JOB NO.:

SHEET NO.
17A

Date: 11/8/23 Time: 5:37 PM DWG Name: \\TE-GCS\01-Projects\21-470 Tyler West Plaza 2021\03-CADD\05_21-470 JEA UTILITY DETAILS.dwg Layout: 17A

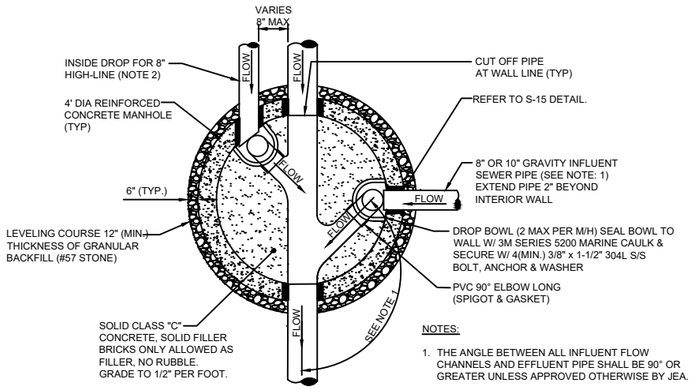

PLAN VIEW (S-5)

(FOR SECTION VIEW SEE S-4)

NOTES:

1. THE ANGLE BETWEEN ALL INFLUENT FLOW CHANNELS AND EFFLUENT PIPE SHALL BE 90° OR GREATER UNLESS APPROVED OTHERWISE BY JEA.
2. THE 8" HIGH-LINE, WHERE UTILIZED, SHALL ENTER THE MANHOLE ON-CENTER OR OFF-CENTER AS SHOWN ABOVE.

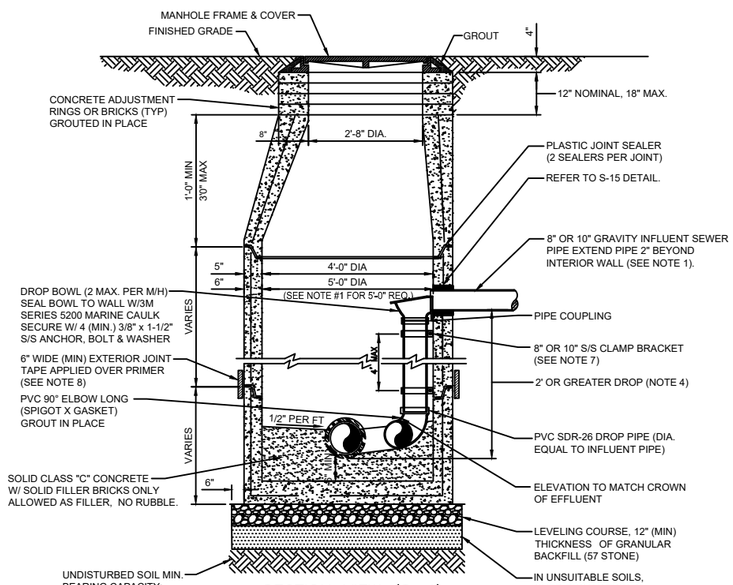

SECTION VIEW (S-4)

(FOR PLAN VIEW SEE S-5)

NOTES:

1. THIS ASSEMBLY IS FOR 8" OR 10" GRAVITY INFLUENT LINES ONLY. NO DROPS ALLOWED FOR FORCE MAINS. MAXIMUM OF 2 INSIDE DROP BOWLS PER MANHOLE. A 5'-0" DIA. MANHOLE (6" THICK WALLS) IS REQUIRED IF TWO INSIDE DROPS ARE CONSTRUCTED WITH ONE OR BOTH BEING 10" SIZE. DROP BOWL BY RELINER OR APPROVED EQUAL REQUIRED. THE INSIDE DROP FOR AN 8" HIGH-LINE SHALL BE CONSTRUCTED SIMILAR TO ABOVE (SEE PLATE S-5).
2. PRECAST MANHOLE SECTIONS TO BE MANUFACTURED IN ACCORDANCE WITH THE LATEST EDITIONS OF A.S.T.M. C-478 WITH 4000 LB. CONC., TYPE II CEMENT. ALL LIFTING HOLES AND OUTSIDE INSERTS SHALL BE FILLED WITH NON-SHRINK GROUT AND COATED WITH BITUMINOUS WATERPROOFING MATERIAL.
3. THE INTERIOR AND EXTERIOR OF MANHOLE AND THE INTERIOR OF ADJUSTMENT RINGS SHALL BE GIVEN TWO COATS OF BITUMINOUS WATERPROOFING MATERIAL.
4. TYPE "B" MANHOLE MUST BE USED FOR 2' OR GREATER INFLUENT PIPE DROPS.
5. THE DROP BOWL ASSEMBLY SHALL BE INSTALLED PRIOR TO APPLICATION OF SPECIALTY LINING MATERIAL.
6. A TYPE "D" MANHOLE SHALL BE UTILIZED WHEN THREE OR MORE (2' OR GREATER) DROPS ARE INVOLVED OR WHEN INFLUENT PIPES AREA LARGER THAN 10" IN SIZE.
7. ADJUSTABLE CLAMPING BRACKET (MIN. 2 PER DROP BOWL ASSY). 1-1/2" WIDE, 11 GA. W/ 3/8" DIA. 18-8 PINCH BOLTS AND NUTS. SECURE TO M/H WALL WITH (2) 3/8" X 1" BOLT, ANCHOR & WASHER PER BRACKET ASSY. ALL 304 OR 316 STAINLESS STEEL MATERIALS.
8. ALL M/H JOINTS BELOW THE TOP CONE SECTION SHALL INCLUDE A 6" WIDE (MIN) EXTERIOR JOINT TAPE (W/PRIMER). TAPE ON THE CONE SECTION IS OPTIONAL.
9. IN SILTS, CLAY OR HIGHLY ORGANIC SOILS (FINE-GRAINED SOILS INCLUDING SOIL GROUPS ML, CL, OL, MH, CH, OH AND PT) THE SOILS SHALL BE OVER-EXCAVATED AN ADDITIONAL 24" (AT A MIN.) AND BACKFILLED WITH AASHTO CLASS A-3 SOIL (COMPACTED TO 98%, ASTM D1557) OR OVER-EXCAVATE AN ADDITIONAL 12" (AT A MIN.) AND BACKFILL WITH GRANULAR BACKFILL (57 STONE).

SANITARY SEWER TYPE "B" MANHOLE 8"-10" SEWERS

JANUARY 2023 — PLATES S-4, S-5

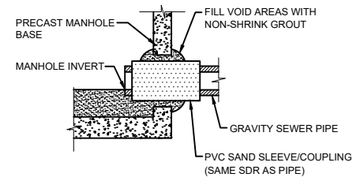

PVC SAND SLEEVE

(FOR EXISTING AND NEW M/H CONSTRUCTION)

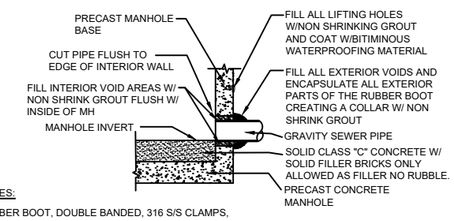

NOTES:

RUBBER BOOT, DOUBLE BANDED, 316 S/S CLAMPS, MEETING THE ASTM C923 STANDARD. Kor-N-Seal® I EX SERIES CONNECTOR WITH DOUBLE STAINLESS STEEL BANDS OR EQUAL

RUBBER BOOT

(FOR NEW M/H CONSTRUCTION ONLY, MAXIMUM DEPTH 15FT)

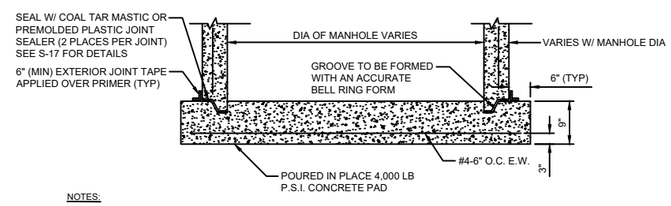

NOTES:

THE USE OF THE POURED IN PLACE MANHOLE BOTTOM SHALL BE MINIMIZED AND SHALL BE SPECIFICALLY APPROVED BY JEA PRIOR TO CONSTRUCTION.

MANHOLE BOTTOM

MANHOLE PIPE CONNECTION DETAIL

JANUARY 2023 — PLATE S-15

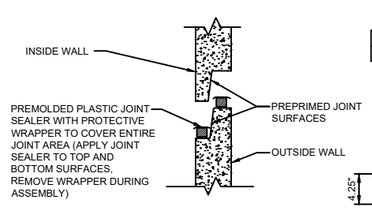

JOINT ASSEMBLY DETAIL

MANHOLE JOINT	"A"	"B"	"C"	"D"
7° JOINT ANGLE	53.043	52.543	51.500	52.000

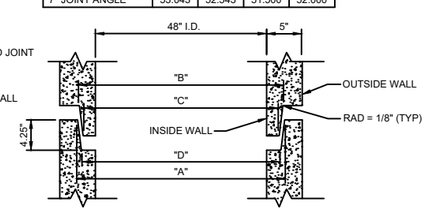

JOINT CONSTRUCTION DETAIL

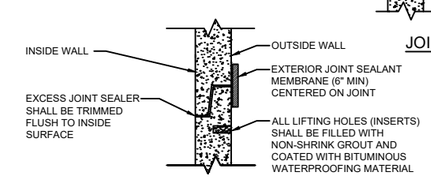

COMPLETED JOINT DETAIL

PRECAST SEWER MANHOLE JOINT DETAIL

JANUARY 2023 — PLATE S-17

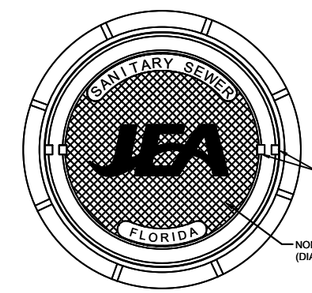

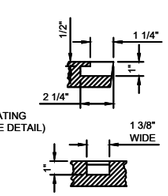

PICKHOLE DETAIL

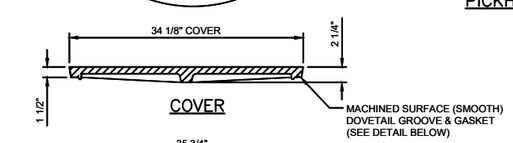

COVER

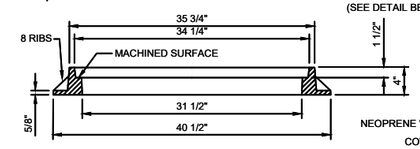

RING

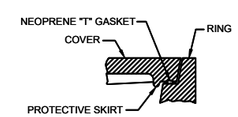

GROOVE & GASKET DETAIL

NOTES:

1. MATERIAL: ASTM A-48 CLASS 35B GRAY IRON.
2. RING WEIGHT 230 LBS APPROX.
3. COVER WEIGHT 230 LBS. APPROX.
4. ALL DIMENSIONS ARE SHOWN IN INCHES.
5. FOR MANHOLES WHICH WILL BE MAINTAINED BY JEA (INCLUDING UTILITY DEDICATION PROJECTS), THE COVER SHALL INCLUDE THE "JEA" LOGO AND A NEOPRENE GASKET.
6. FOR MANHOLES WHICH WILL BE MAINTAINED BY PARTIES OTHER THAN JEA (SUCH AS PRIVATE SEWER COLLECTION SYSTEMS, PRIVATE (FORCE MAIN) PUMP OUT BOX AND SYSTEMS NOT MAINTAINED BY JEA), THE COVER SHALL INCLUDE "SANITARY SEWER" GENERIC LETTERING (NO "JEA" LOGO OR NEOPRENE GASKET).

SANITARY SEWER MANHOLE FRAME AND COVER

JANUARY 2023 — PLATE S-1

TOCOI Engineering, LLC
714 NORTH ORANGE AVENUE, GREEN COVE SPRINGS, FL 32043
PH: 904-215-1388 E.B. NUMBER: 26383

ENGINEER OF RECORD
CHARLES SOHM
FLORIDA
REGISTRATION NUMBER: 79289

TYLER PLAZA WEST
FOR
TYLER PLAZA WEST, LLC

JEA UTILITY DETAILS

REVISIONS

PLOT DATE:
DRAWN BY:
DESIGNED BY:
CHECKED BY:
SCALE:
JOB NO.:

SHEET NO.
17B

Date: 11/8/23 Time: 5:38 PM DWG Name: \\TE-GCS\01-Projects\21-470 Tyler West Plaza 2021\03-CADD\05_21-470 JEA UTILITY DETAILS.dwg Layout: 17B

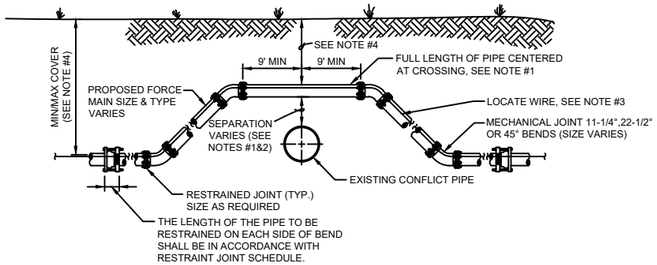

CASE "A" CROSSING

NOTES:

1. IF EXISTING CONFLICT PIPE IS A WATER OR RECLAIMED WATER MAIN, 12-INCHES OF SEPARATION IS REQUIRED. A FULL LENGTH OF PIPE SHALL BE CENTERED OVER EXISTING UTILITY MAIN TO PROVIDE MAXIMUM JOINT SPACING FOR ALL CROSSINGS.
2. FOR OTHER LOCATION LIMITATIONS SEE DETAIL (S-26 & S-27).
3. LOCATING WIRE REQUIRED: SEE DETAIL S-49.
4. THE COVER FOR PIPING LESS THAN 24" SIZE SHALL BE 30" (MIN) IN UNPAVED AREAS, 36" (MIN) IN PAVED AREAS AND A MAXIMUM COVER OF 60", UNLESS PRE-APPROVED BY JEA. THE COVER FOR PIPING 24" SIZE AND LARGER SHALL BE 36" (MIN) IN PAVED AND UNPAVED AREAS AND A MAXIMUM COVER OF 84", UNLESS APPROVED BY JEA.
5. THE SOILS BETWEEN THE MAIN AND THE CONFLICT PIPE SHALL BE COMPACTED TO 98% OF THE MAXIMUM DENSITY AS DETERMINED BY THE LABORATORY MODIFIED PROCTOR TEST ASTM D 1557.

ADJUSTMENT OVER EXISTING UTILITIES MECHANICAL RESTRAINTS

JANUARY 2023 PLATE S-39

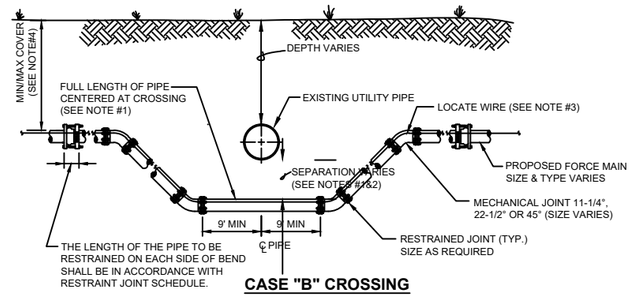

CASE "B" CROSSING

NOTES:

1. IF EXISTING CONFLICT PIPE IS A WATER OR RECLAIMED WATER MAIN, 12-INCHES OF SEPARATION IS REQUIRED.A FULL LENGTH OF PIPE SHALL BE CENTERED OVER EXISTING UTILITY MAIN TO PROVIDE MAXIMUM JOINT SPACING FOR ALL CROSSINGS.
2. FOR OTHER LOCATION LIMITATIONS SEE DETAIL (S-26 & S-27).
3. LOCATING WIRE REQUIRED: SEE DETAIL S-49.
4. THE COVER FOR PIPING LESS THAN 24" SIZE SHALL BE 30" (MIN) IN UNPAVED AREAS, 36" (MIN) IN PAVED AREAS AND A MAXIMUM COVER OF 60", UNLESS PRE-APPROVED BY JEA. THE COVER FOR PIPING 24" SIZE AND LARGER SHALL BE 36" (MIN) IN PAVED AND UNPAVED AREAS AND A MAXIMUM COVER OF 84", UNLESS APPROVED BY JEA.
5. THE SOILS BETWEEN THE MAIN AND THE CONFLICT PIPE SHALL BE COMPACTED TO 98% OF THE MAXIMUM DENSITY AS DETERMINED BY THE LABORATORY MODIFIED PROCTOR TEST ASTM D 1557.

ADJUSTMENT UNDER EXISTING UTILITIES MECHANICAL RESTRAINTS

JANUARY 2023 PLATE S-41

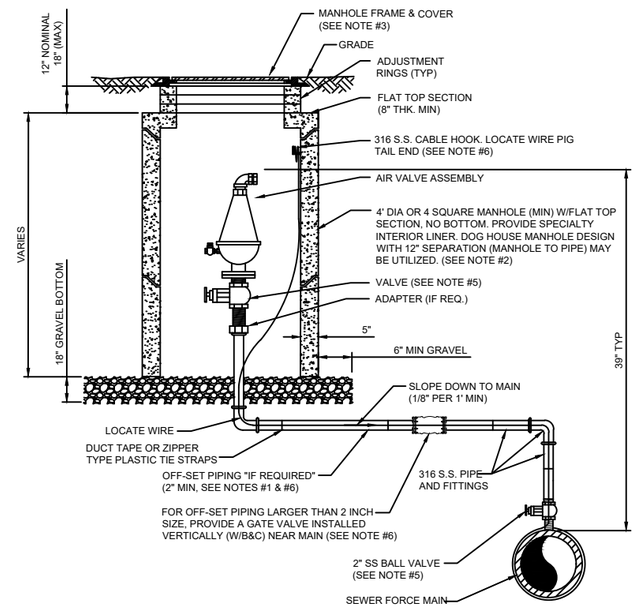

NOTES:

1. THE AIR ASSEMBLY MANHOLE SHALL BE LOCATED OUTSIDE OF THE ROADWAY PAVEMENT AREA (I.E. LOCATED IN NON-TRAFFIC AREAS). IF OFF-SET PIPING IS REQUIRED, THE PIPING SHALL BE 2 INCH MINIMUM, (SAME SIZE AS AIR VALVE INLET). FOR PIPE SIZES 3 INCH AND SMALLER: PIPING SHALL BE 316 STAINLESS STEEL SCH.40, STD GRADE, THREADED. FOR PIPE SIZES 4 INCH AND LARGER: PIPING SHALL BE 316 STAINLESS STEEL SCH. 10 (MIN), WELDED OR PVC DR-18 PIPE AND FITTINGS-RESTRAINED.
2. THE CONCRETE MANHOLE SHALL INCLUDE A POLYURETHANE SPECIALTY LINER (PER SPEC SECTION 446) TO BE INSTALLED ON THE INTERIOR SURFACES INCLUDING THE RISER SECTION TOP AND THE ADJUSTMENT RINGS. A BITUMINOUS WATERPROOFING MATERIAL SHALL BE PROVIDED ON THE OUTSIDE SURFACES OF THE MANHOLE.
3. FRAME AND COVER SHALL BE JEA STANDARD. THE COVER SHALL HAVE NO GASKET TO ALLOW AIR TO EXIT VAULT (REMOVE GASKET IF NECESSARY FROM THE UNDER SIDE OF STANDARD JEA COVER). THE COVER (WHEN FLIPPED OPEN) MUST CLEAR THE AIR VALVE ASSEMBLY AT ALL TIMES OR A SQUARE TOP WITH ALUMINUM DOOR SHALL BE PROVIDED (NON-TRAFFIC LOCATIONS ONLY).
4. FOR PIPE SIZES 3 INCH AND SMALLER, PROVIDE A STAINLESS STEEL BALL VALVE (2" MIN). FOR PIPE SIZES 4 INCH AND LARGER, PROVIDE A FLANGE GATE VALVE (WHEEL OPERATOR) OR PLUG VALVE. (LEVER ARM OPERATOR) SEE SPECIFICATION FOR ADDITIONAL REQUIREMENTS.
5. FOR A 2" AIR VALVE, PROVIDE 2" STAINLESS STEEL BALL VALVE AT THE MAIN. FOR AIR VALVES LARGER THAN 2" SIZE, PROVIDE A TAPPING SLEEVE OR DUCTILE IRON TEE FITTING. ALSO, FOR OFF-SET PIPING LARGER THAN 2 INCH SIZE, PROVIDE A GATE VALVE (INSTALLED VERTICALLY NEAR MAIN). SEE SPECIFICATIONS FOR ADDITIONAL REQUIREMENTS.
6. LOCATE WIRE SHALL HAVE ENOUGH SLACK TO REACH 4' ABOVE FINAL GRADE.

AIR VALVE ASSEMBLY INSIDE MANHOLE

JANUARY 2023 PLATE S-29

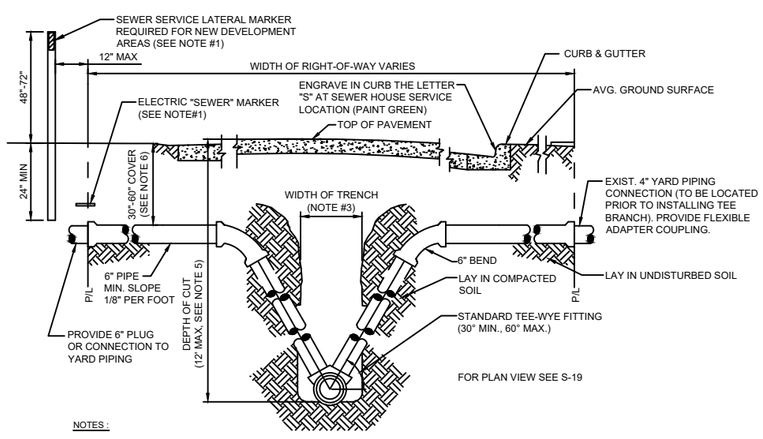

NOTES :

1. TO MARK THE LOCATION OF THE 6" PLUG FOR NEW SERVICE: FOR PROJECTS WHERE NO CONCRETE CURB EXIST, AN ELECTRONIC "SEWER" MARKER IS REQUIRED FOR ALL LATERALS WHICH ARE"NOT" IN USE". FOR NEW DEVELOPMENT AREAS WHERE THE SEWER LATERAL IS "NOT IN USE", A LANDSCAPE TIMBER OR 3x3 MIN. P.T. POST (TOP PAINTED GREEN) SHALL BE INSTALLED. WHERE REQUIRED BY JEA OR NO CONCRETE CURB EXIST, AN ELECTRONIC "SEWER" MARKER SHALL BE INSTALLED TO MARKER SHALL ALSO BE INSTALLED.
2. THE MINIMUM SIZE OF ALL HOUSE LATERALS SHALL BE 6 INCHES. THE MAXIMUM LENGTH OF A HOUSE LATERAL SHALL BE 60 FEET (LENGTH BETWEEN SEWER MAIN OR MANHOLE TO CUSTOMERS PROPERTY LINE).
3. SEE MEASUREMENT AND PAYMENT SECTION FOR MAXIMUM PAYMENT WIDTHS.
4. ALL GRAVITY SEWER MAINS AND ASSOCIATED SEWER LATERAL PIPE AND FITTINGS (INCLUDING THE TEE-WYE FITTING) SHALL BE PVC SDR-26.
5. UNLESS APPROVED OTHERWISE BY A JEA O&M MANAGER, NO GRAVITY SEWER MAIN WITH SEWER SERVICE LATERALS SHALL BE CONSTRUCTED WITH A "DEPTH OF CUT" GREATER THAN 12 FEET.
6. SEWER SERVICE LATERALS ASSOCIATED WITH GRAVITY SEWER MAINS WHICH ARE DEEPER THAN 12 FEET, MUST BE ROUTED TO A GRAVITY SEWER HIGH-LINE, A MANHOLE OR OTHER JEA APPROVED METHOD.
7. THE SEWER SERVICE LATERAL SHALL BE CONSTRUCTED AT A DEPTH TO ALLOW A GRAVITY CONNECTION BY THE CUSTOMER, WHERE POSSIBLE (CONTINGENT UPON MEETING THE CUSTOMER'S ON-SITE CONDITIONS AND LOCAL CONSTRUCTION STANDARDS). A LATERAL REQUIRING MORE THAN 60" OF COVER MUST BE APPROVED, PRIOR TO CONSTRUCTION, BY JEA.

HOUSE LATERAL - SECTION VIEW

JANUARY 2023 PLATE S-20

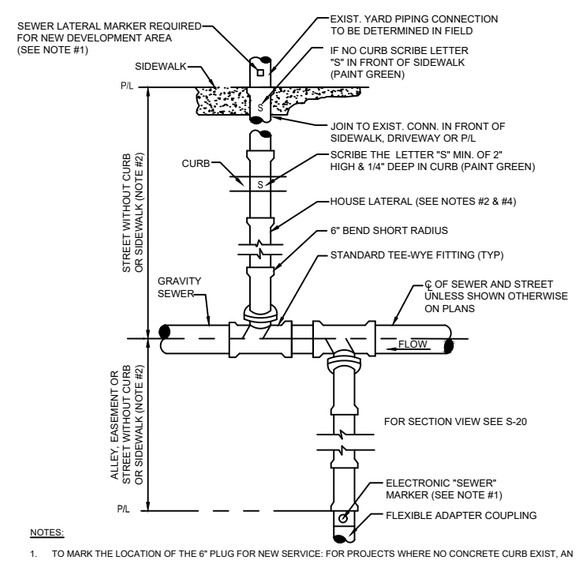

NOTES:

1. TO MARK THE LOCATION OF THE 6" PLUG FOR NEW SERVICE: FOR PROJECTS WHERE NO CONCRETE CURB EXIST, AN ELECTRONIC "SEWER" MARKER IS REQUIRED FOR ALL LATERALS WHICH ARE"NOT" IN USE". FOR NEW DEVELOPMENT AREAS WHERE THE SEWER LATERAL IS "NOT IN USE", A LANDSCAPE TIMBER OR 3x3 MIN. P.T. POST (TOP PAINTED GREEN) SHALL BE INSTALLED. WHERE REQUIRED BY JEA OR NO CONCRETE CURB EXIST, AN ELECTRONIC "SEWER" MARKER SHALL BE INSTALLED TO MARKER SHALL ALSO BE INSTALLED.
2. THE MINIMUM SIZE OF ALL HOUSE LATERALS SHALL BE 6 INCHES. THE MAXIMUM LENGTH OF A HOUSE LATERAL SHALL BE 60 FEET (LENGTH BETWEEN SEWER MAIN OR MANHOLE TO CUSTOMERS PROPERTY LINE).
3. NO SEWER SERVICE CONNECTIONS PERMITTED ON GRAVITY SEWER PIPE WHICH ARE 16" AND LARGER.
4. ALL GRAVITY SEWER MAINS AND ASSOCIATED SEWER LATERAL PIPE AND FITTINGS (INCLUDING THE TEE-WYE FITTING) SHALL BE PVC SDR-26.

HOUSE LATERAL - PLAN VIEW

JANUARY 2023 PLATE S-19

TOCOI Engineering, LLC
714 NORTH ORANGE AVENUE, GREEN COVE SPRINGS, FL 32043
PH: 904-215-1388 E.B. NUMBER: 26383

ENGINEER OF RECORD
CHARLES SOHM
FLORIDA
REGISTRATION NUMBER: 79289

TYLER PLAZA WEST
FOR
TYLER PLAZA WEST, LLC

JEA UTILITY DETAILS

REVISIONS

PLOT DATE:
DRAWN BY:
DESIGNED BY:
CHECKED BY:
SCALE:
JOB NO.:

SHEET NO.
17C

Date: 11/8/23 Time: 5:39 PM DWG Name: \\TE-GCS\01-Projects\21-470 Tyler West Plaza 2021\03-CADD\05_21-470 JEA UTILITY DETAILS.dwg Layout: 17C

PVC PIPE RESTRAINT NOTES:

1. THIS SCHEDULE SHALL BE UTILIZED ON ALL WATER, SEWER FORCE MAIN OR RECLAIMED WATER SYSTEMS. ALL FITTINGS SHALL BE RESTRAINED TO LENGTHS INDICATED ON THE ABOVE SCHEDULE, AT A MINIMUM.
2. ASSUMPTIONS: PVC PIPE, SAFETY FACTOR=1.5, TEST PRESSURE=150PSI, SOIL=GM OR SM, TRENCH TYPE 3, DEPTH OF COVER=30 INCHES FOR 20" AND SMALLER PIPE SIZE OR 36 INCHES FOR 24" AND LARGER PIPE SIZE.
3. BENDS AND VALVES: SHALL BE RESTRAINED ON EACH SIDE OF FITTING.
4. VERTICAL OFFSETS: ARE APPROX. 3 FEET COVER ON TOP AND APPROX. 8 FEET COVER ON BOTTOM. PER THE DETAILS, Lu IS THE RESTRAINED LENGTH FOR THE UPPER (TOP) LEVEL. Li IS THE RESTRAINED LENGTH FOR THE LOWER (DEEPER) LEVEL. ASSUME 45 DEGREE BENDS.
5. TEES: TOTAL LENGTH BETWEEN FIRST JOINTS OR RESTRAINED LENGTH ON EITHER SIDE OF TEE (RUN) SHALL BE A TOTAL DISTANCE OF 30 FEET (MIN). SEE SCHEDULE ABOVE FOR RESTRAINT LENGTH ON TEE "BRANCH" LINE.
6. HDPE TO PVC TRANSITIONS: THE PVC PIPE SIDE SHALL BE RESTRAINED 35 FT (MIN).
7. THE INSTALLATION OF BELL HARNESS RESTRAINTS AT PVC JOINTS (DR-18 & 25 PIPE) SHALL BE COMPLETED PER THE MANUFACTURERS RECOMMENDATION, WHICH INCLUDES NOT OVER TIGHTENING THE PARALLEL RODS/NUTS. THESE NUTS SHOULD ONLY BE SNUG TIGHT. THE HOME MARKS ON THE PIPE SHOULD ALWAYS BE VISIBLE AFTER THE RESTRAINT IS INSTALLED. OVERHOMING THE JOINT MAY CAUSE A FAILURE AT THE BELL RESULTING IN A SERVICE OUTAGE.

LENGTH (L) TO BE RESTRAINED

NOMINAL PIPE SIZE (IN.)	HORIZONTAL BENDS 90° BENDS L (FT.)	45° BENDS L (FT.)	22.5° BENDS L (FT.)	11.25° BENDS L (FT.)	VERTICAL OFFSETS 45° BENDS (SEE NOTE 4) UPPER L (FT.)	LOWER L (FT.)	VALVES OR DEAD ENDS L (FT.)
4	21	9	5	3	17	3	47
6	30	13	6	3	23	4	66
8	38	16	8	4	30	6	86
10	45	19	9	5	36	7	103
12	53	22	11	6	43	8	121
14	61	26	13	6	50	9	140
16	66	28	14	7	55	10	154
18	73	30	15	8	60	11	170
20	79	33	16	8	66	12	186
24	79	33	16	8	77	15	185
30	93	39	19	10	97	17	222
36	106	39	21	11	107	20	257
42	117	49	24	12	120	24	289
48	144	53	26	13	133	26	321

(SEE PLATE Nos. 38C & 38D FOR ADDITIONAL DETAILS)

REDUCERS SIZE (IN.)	L (FT.)
6x4	34
8x6	36
8x4	62
10x8	35
10x6	63
12x10	36
12x8	64
16x12	66
16x10	92
20x18	35
20x16	66
20x12	117
24x20	56
24x18	80
24x16	101
30x24	78
30x20	121
36x30	78
36x24	141
42x36	75
42x30	140
48x42	75
48x36	139

TEES SEE NOTE 5 RUN SIZE (IN.)	BRANCH SIZE (IN.)	L (FT.)
4	4	F.O.
4	6	10
	4 < LESS	F.O.
8	8	29
	6 < LESS	F.O.
10	10	45
	8	13
	6 < LESS	F.O.
12	12	62
	10	32
	8 < LESS	F.O.
16	16	94
	12	39
	10	5
	10 < LESS	F.O.
20	20	125
	16	76
	12	14
	10 < LESS	F.O.
24	24	124
	20	84
	16	36
	12 < LESS	F.O.
30	30	159
	24	104
	20	60
	16	5
	16 < LESS	F.O.
36	36	192
	30	142
	24	83
	20	33
	16 < LESS	F.O.
42	42	223
	36	178
	30	124
	24	59
	20	5
	16 < LESS	F.O.
48	48	253
	42	209
	36	162
	30	104
	24	34
	20 < LESS	F.O.

F.O. = FITTING ONLY

PVC PIPE RESTRAINT JOINT SCHEDULE

JANUARY 2023 PLATE S-38A

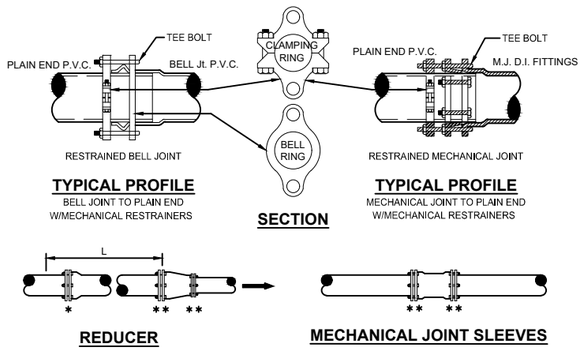

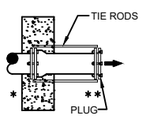

NO. OF TIE RODS REQUIRED

3" - 8"	DIAMETER MAIN - 2 TIE RODS REQUIRED PER JOINT (3/4" ROD)
10" - 12"	DIAMETER MAIN - 4 TIE RODS REQUIRED PER JOINT (3/4" ROD)
14" - 16"	DIAMETER MAIN - 6 TIE RODS REQUIRED PER JOINT (3/4" ROD)
18" - 20"	DIAMETER MAIN - 8 TIE RODS REQUIRED PER JOINT (3/4" ROD)
24"	DIAMETER MAIN - 12 TIE RODS REQUIRED PER JOINT (3/4" ROD)
30" - 36"	DIAMETER MAIN - 14 TIE RODS REQUIRED PER JOINT (1" ROD)
42" - 48"	DIAMETER MAIN - 16 TIE RODS REQUIRED PER JOINT (1 1/4" ROD)
54"	DIAMETER MAIN - 18 TIE RODS REQUIRED PER JOINT (1 1/4" ROD)

DEAD - END THRUST COLLAR ANCHOR

TO BE USED INSTEAD OF TOTAL RESTRAINED LENGTH (OPTIONAL) SIZE AS PER THRUST BLOCK DETAIL (W-38). SEE DETAILS W-36 & W-37.

GENERAL NOTE:

1. PAY ITEM " * " DENOTES A RESTRAINT WHICH IS PAID FOR ON A PER EACH BASIS.
2. PAY ITEM " ** " DENOTES A RESTRAINT WHICH IS INCLUDED IN THE UNIT PRICE BID FOR FITTING OR VALVE.
3. ➡ INDICATES DIRECTION OF THRUST FORCE.

MECHANICAL RESTRAINT DETAILS - I

JANUARY 2023 PLATE S-38C

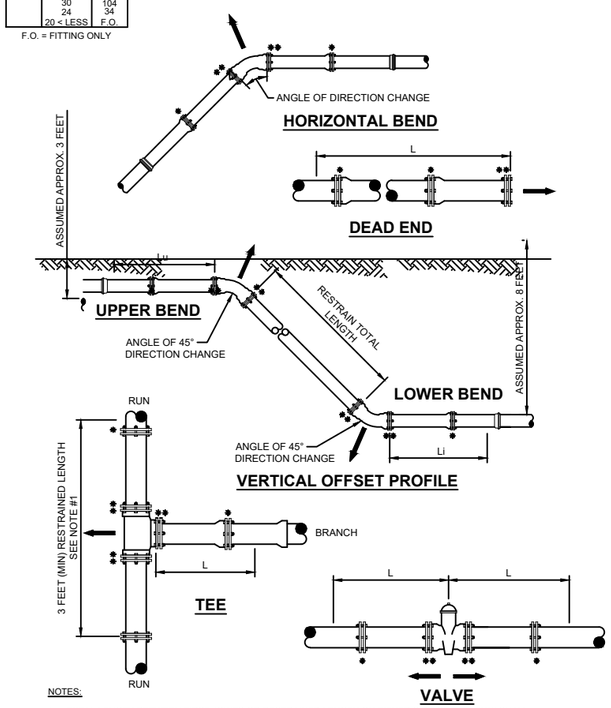

NOTES:

1. TOTAL LENGTH BETWEEN FIRST JOINTS OR RESTRAINED LENGTH ON EITHER SIDE OF TEE (RUN) SHALL BE A TOTAL DISTANCE OF 6 FEET (MIN.). THE PROJECT ENGINEER CAN INCREASE THIS LENGTH TO REDUCE THE NUMBER OF RESTRAINS REQUIRED. ANY CHANGES TO THIS TABLE MUST BE SUMMITTED TO JEA FOR APPROVAL.
2. PAY ITEM *** DENOTES A RESTRAINT WHICH IS PAID FOR ON A PER EACH BASIC.
3. PAY ITEM **** DENOTES A RESTRAINT WHICH IS INCLUDED IN THE UNIT PRICE BID FOR FITTING OR VALVE.

MECHANICAL RESTRAINT DETAILS - II

JANUARY 2023 PLATE S-38D

TOCOI Engineering, LLC
714 NORTH ORANGE AVENUE, GREEN COVE SPRINGS, FL 32043
PH: 904-215-1388 E.B. NUMBER: 26383

ENGINEER OF RECORD
CHARLES SOHM
FLORIDA
REGISTRATION NUMBER: 79289

TYLER PLAZA WEST
FOR
TYLER PLAZA WEST, LLC

JEA UTILITY DETAILS

REVISIONS

PLOT DATE:
DRAWN BY:
DESIGNED BY:
CHECKED BY:
SCALE:
JOB NO.:

SHEET NO.
17D

Date: 11/8/23 Time: 5:39 PM DWG Name: \\TE-GCS\01-Projects\21-470 Tyler West Plaza 2021\03-CADD\05_21-470 JEA UTILITY DETAILS.dwg Layout: 17D

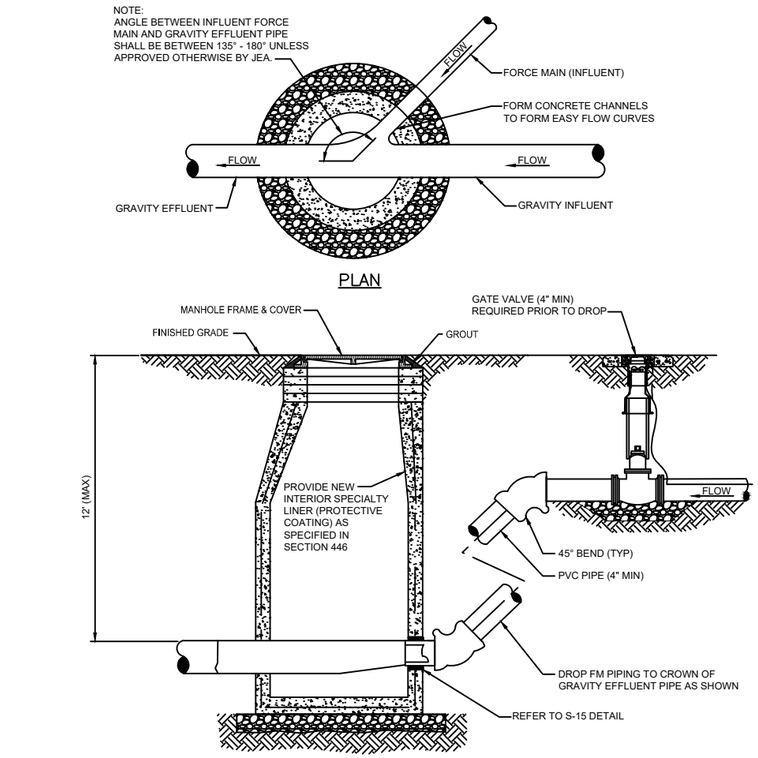

TYPICAL FORCE MAIN CONNECTION TO MANHOLE

JANUARY 2023 PLATE S-18

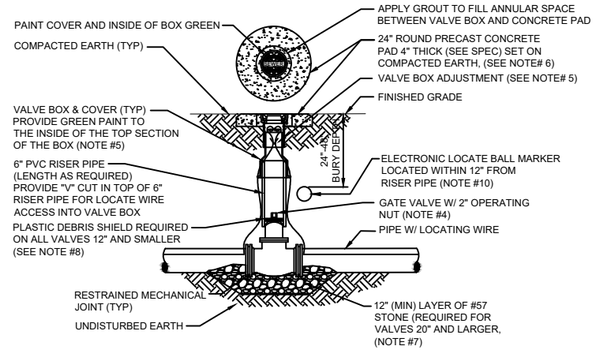

NOTES:

1. FOR UNPAVED LOCATIONS, A PRECAST CONCRETE VALVE PAD SHALL BE PROVIDED AND INSTALLED FLUSH WITH GRADE. CONCRETE PAD IS NOT REQUIRED FOR VALVE LOCATED IN THE ROADWAY, UNLESS SHOWN OR NOTED OTHERWISE.
2. LOCATING WIRE IS REQUIRED ON ALL PRESSURE PIPING (SEE DETAIL S-49).
3. A "V" CUT SHALL BE CARVED IN THE CURB CLOSEST/(ASPHALT IF NO CURB) ADJACENT TO ALL BELOW GRADE VALVES. THE "V" CUT IS TO BE PAINTED GREEN.
4. IN PAVED AREAS, INSTALL VALVE AT A DEPTH TO ALLOW A 12" MIN. DISTANCE BETWEEN THE VALVE COVER PLATE AND THE TOP OF THE VALVE OPERATING NUT. OUTSIDE OF PAVED AREAS (GRASS), INSTALL VALVE AT A DEPTH TO ALLOW A 6" MINIMUM DISTANCE BETWEEN THE VALVE COVER AND THE TOP OF THE VALVE OPERATING NUT. OPERATING NUT/STEM EXTENSION SHALL BE PROVIDED (WHERE APPLICABLE) SO THAT THE OPERATING NUT WILL BE NO MORE THAN 30 INCHES BELOW FINISHED GRADE.
5. FOR NEW CONSTRUCTION, THE VALVE BOX SHALL BE ADJUSTED TO MIDRANGE TO ALLOW FOR FUTURE BOX ADJUSTMENTS. ROUTE LOCATE WIRES THRU A "V" CUT IN THE TOP OF THE 6" PVC RISER PIPE FOR LOCATE WIRE ACCESS INTO VALVE BOX. THE LOCATE WIRES WITH A 24" LONG PIG-TAIL AT THE TOP SHALL BE CONNECTED TOGETHER WITH A WIRE NUT.
6. BRASS IDENTIFICATION TAG INDICATING "SEWER", VALVE SIZE, DIRECTION AND TURNS TO OPEN & VALVE TYPE. PROVIDE A 1/4" HOLE IN BRASS TAG AND ATTACH TAG (TWIST WIRE AROUND TAG) TO THE END OF THE LOCATE WIRE. TAGS ARE NOT REQUIRED ON VALVES INSTALLED ON FIRE HYDRANT BRANCH LINES.
7. IN LIEU OF PRECAST CONCRETE PAD, A 6" THICK X 24" (ROUND OR SQUARE) POURED CONCRETE PAD W/2 - #4 REBAR AROUND PERIMETER, MAY BE USED.
8. GRAVEL SHALL BE PROVIDED UNDER ALL VALVES 20" AND LARGER. THE MINIMUM VERTICAL LIMIT OF GRAVEL IS 12" UNDER THE VALVE UP TO 1/4 THE OVERALL HEIGHT OF THE VALVE.
9. FOR VALVES 12 INCH AND SMALLER, PROVIDE A WHITE OR BLACK PLASTIC DEBRIS SHIELD WHICH INSTALLS BELOW THE OPERATING NUT. THIS SHIELD SHALL CENTER THE RISER PIPE BOX OVER THE OPERATING NUT AND MINIMIZE INFILTRATION. SHIELD SHALL BE BY AFC, BOXLOK OR APPROVED EQUAL.
10. ALL VALVES SHALL BE INSTALLED WITH AN ELECTRIC LOCATE MARKER. MARKER SHALL BE 4" DIA. COLOR CODED BALL MARKER (3M-1404XR FOR SEWER).

SEWER VALVE DETAIL

JANUARY 2023 PLATE S-30

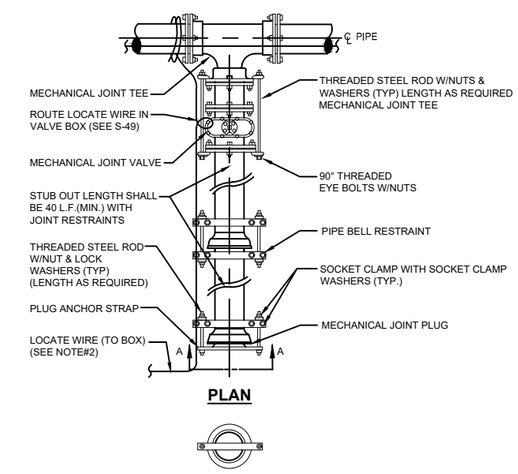

NOTES:

1. IN LIEU OF BELL/ROD RESTRAINTS, MECHANICAL JOINT RESTRAINTS MAY BE USED.
2. LOCATING WIRE REQUIRED, UTILIZING A LOCATE WIRE BOX INSTALLED AT PLUG LOCATION.
3. NUMBER OF TIE RODS REQUIRED IS AS FOLLOWS:
   - 3" - 8" DIAMETER MAIN - 2 TIE RODS REQUIRED PER JOINT (3/4" ROD)
   - 10" - 12" DIAMETER MAIN - 4 TIE RODS REQUIRED PER JOINT (3/4" ROD)
   - 14" - 16" DIAMETER MAIN - 6 TIE RODS REQUIRED PER JOINT (3/4" ROD)
   - 18" - 20" DIAMETER MAIN - 8 TIE RODS REQUIRED PER JOINT (3/4" ROD)
   - 24" DIAMETER MAIN -12 TIE RODS REQUIRED PER JOINT (3/4" ROD)
   - 30" - 36" DIAMETER MAIN -14 TIE RODS REQUIRED PER JOINT (1" ROD)
   - 42" - 48" DIAMETER MAIN -16 TIE RODS REQUIRED PER JOINT (1 1/4" ROD)
   - 54" DIAMETER MAIN -18 TIE RODS REQUIRED PER JOINT (1 1/4" ROD)
4. THE LOCATION OF THE DEAD END PLUG SHALL NOT BE UNDER PAVEMENT, IF POSSIBLE. THE STUB OUT SHALL EXTEND BEYOND THE INTERSECTION AREAS OR ROAD CROSSING BY 10 FEET (MIN.) WHERE POSSIBLE.

PLUGGED DEAD END USING MECHANICAL RESTRAINTS

JANUARY 2023 PLATE S-44

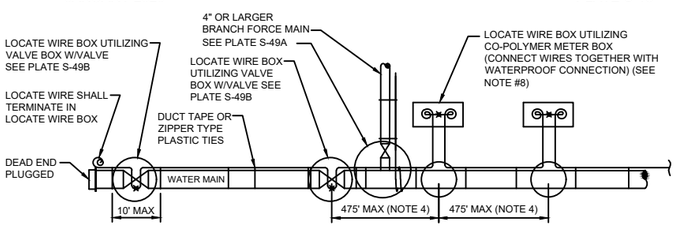

NOTES:

1. LOCATING WIRE TO BE INSTALLED IN EITHER THE ONE OR ELEVEN O'CLOCK POSITION ON ALL DUCTILE IRON 0R PVC (PRESSURE MAINS). LOCATE WIRE SHALL ALSO BE INSTALLED ON ALL (HDPE) POLY MAIN PIPING (1:00 OR 11:00 POSITION, IF POSSIBLE).
2. SECURE LOCATING WIRE TO PVC FORCE MAIN BY USE OF DUCT TAPE OR ZIPPER TYPE PLASTIC TIE STRAPS SPACED AT A MAXIMUM DISTANCE OF TEN (10') AND AT EACH SIDE OF BELL JOINT OR FITTING.
3. THE ENTIRE LOCATING SYSTEM SHALL BE SUBJECTED TO TESTING TO DETERMINE ITS RELIABILITY. WHERE INSTALLED UNDER PAVEMENT AREAS, TESTING SHALL BE DONE PRIOR TO THE PLACEMENT OF PAVEMENT, UNLESS APPROVED OTHERWISE BY JEA.
4. LOCATING WIRE SHALL TERMINATE WITHIN AN ACTIVE VALVE BOX (WITH A VALVE) OR A METER BOX (IF NO VALVE) AT 475' INTERVALS. SEE DETAIL PLATE S-49B. WIRE CONNECTIONS BELOW GROUND (OUTSIDE OF A BOX) SHALL BE AVOIDED.
5. LOCATING WIRE SHALL BE 12 GAUGE COPPER WIRE WITH .03 INCHES (MINUMUM) HDPE INSULATION THICKNESS, 0.141 INCHES (MINIMUM) O.D. RATED BREAK LOAD 250LBS., UF RATED (DIRECT BURIAL), GREEN COLOR. FOR HDD INSTALLATIONS, THE LOCATE WIRE SHALL BE COPPER CODED STEEL AS SPECIFIED IN SPEC. SECTION 750.
6. "⊗" INDICATES THAT THE WIRES ARE CONNECTED TOGETHER WITH WATERPROOF CONNECTION. (SEE DETAIL W-49B)
7. "◎" INDICATES A WIRE PIG-TAIL (24" LONG)
8. AN "LW" CUT SHALL BE CARVED IN THE CONCRETE CURB AND PAINTED AT ALL LOCATE WIRE BOXES.
9. FOUR LANES OF TRAFFIC (HAVING TWO LANES OF TRAFFIC IN EACH DIRECTION) OR GREATER THE LOCATE WIRE AND VALVE BOX SHALL BE OFF-SET TO THE RIGHT-OF-WAY.

LOCATE WIRE CONSTRUCTION FOR FORCE MAINS

JANUARY 2023 PLATE S-49

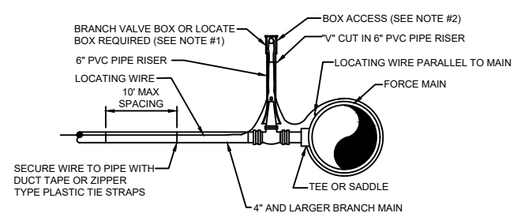

NOTE:

1. NOTE THAT THE BRANCH WIRE IS NOT CONNECTED TO THE MAIN WIRE.
2. LOCATE WIRE SHALL ENTER THE VALVE BOX THROUGH A "V" CUT IN THE 6" PVC RISER PIPE SECTION (SEE S-30).
3. LOCATE WIRE BOX SHALL BE INSTALLED OUTSIDE OF SIDEWALKS, DRIVEWAYS AND PAVEMENT.
4. "◎" INDICATES A WIRE PIG-TAIL (4' LONG)

LOCATE WIRE FOR BRANCH MAIN

JANUARY 2023 PLATE S-49A

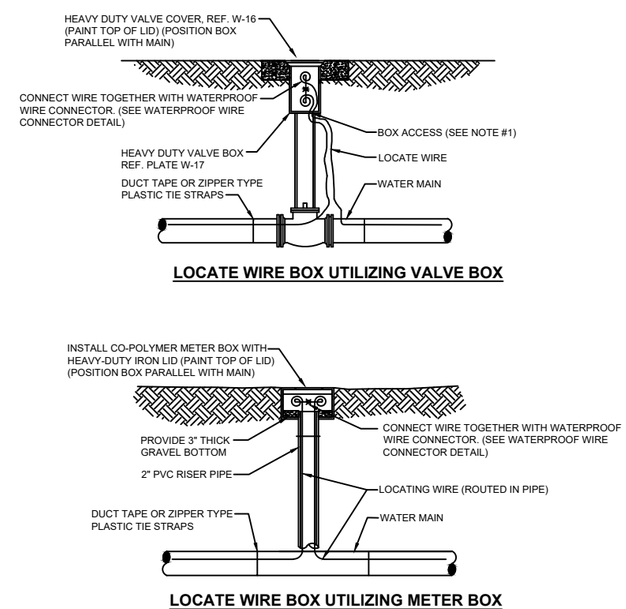

LOCATE WIRE BOX

JANUARY 2023 PLATE S-49B

TOCOI Engineering, LLC
714 NORTH ORANGE AVENUE, GREEN COVE SPRINGS, FL 32043
PH: 904-215-1388 E.B. NUMBER: 26383
ENGINEER OF RECORD CHARLES SOHM
FLORIDA REGISTRATION NUMBER: 79289

TYLER PLAZA WEST FOR TYLER PLAZA WEST, LLC

JEA UTILITY DETAILS

REVISIONS

PLOT DATE:
DRAWN BY:
DESIGNED BY:
CHECKED BY:
SCALE:
JOB NO.:

SHEET NO. 17E

Date: 11/8/23 Time: 5:40 PM DWG Name: \\TE-GCS\01-Projects\21-470 Tyler West Plaza 2021\03-CADD\05_21-470 JEA UTILITY DETAILS.dwg Layout: 17E

HORIZONTAL & VERTICAL SEPARATION REQUIREMENTS

	PROPOSED UTILITY											
	POTABLE WATER			WASTEWATER GRAVITY AND FORCE MAIN			RECLAIMED WATER			VACUUM SEWERS		
CONFLICTING UTILITY	HORIZ.	VERT.	JOINT SPACING*	HORIZ.	VERT.	JOINT SPACING*	HORIZ.	VERT.	JOINT SPACING*	HORIZ.	VERT.	JOINT SPACING*
POTABLE WATER	3' NOTE 1	12"	3' NOTE 2	6' to 10'	12" NOTE 5	6' NOTE 2	3'	12"	6' NOTE 2	3' to 10'	12"	3' NOTE 2
RECLAIMED WATER	3'	12"	6' NOTE 2	3' NOTE 1	12"	3' NOTE 2	3'	12"	6' NOTE 2	3' NOTE 1	12"	3' NOTE 2
WASTEWATER (GRAVITY AND FORCE MAIN)	6' to 10'	12"	6' NOTE 2	3' NOTE 1	12"	6"	3' NOTE 1	12"	3' NOTE 2	3' NOTE 1	12"	3' NOTE 2
VACUUM SEWERS	3' to 10'	12"	3' NOTE 2	3' NOTE 1	12"	6"	3' NOTE 1	12"	3' NOTE 2	3' NOTE 1	12"	3' NOTE 2
RIGHT OF WAYS	3' NOTE 1	N/A	N/A	3' NOTE 1	N/A	N/A	3' NOTE 1	N/A	N/A	3' NOTE 1	N/A	N/A
PERMANENT STRUCTURES (SIGNS, POLES, ETC.)	3' NOTE 1	N/A	N/A	3' NOTE 1	N/A	N/A	3' NOTE 1	N/A	N/A	3' NOTE 1	N/A	N/A
STORM SEWERS	3' NOTE 1	12"	3' NOTE 2	3' NOTE 1	12"	3' NOTE 2	3' NOTE 1	12"	3' NOTE 2	3' NOTE 1	12"	3' NOTE 2
GAS	3' NOTE 1	12"	3' NOTE 2	3' NOTE 1	12"	3' NOTE 2	3' NOTE 1	12"	3' NOTE 2	3' NOTE 1	12"	3' NOTE 2
TREES	3'-6' NOTE 6	N/A	N/A	3'-6' NOTE 6	N/A	N/A	3'-6' NOTE 6	N/A	N/A	3'-6' NOTE 6	N/A	N/A
ALL OTHER UTILITIES	3' NOTE 1	12"	3' NOTE 2	3' NOTE 1	12"	3' NOTE 2	3' NOTE 1	12"	3' NOTE 2	3' NOTE 1	12"	3' NOTE 2

NOTES:

1. THIS SEPARATION REQUIREMENT IS TO PROVIDE ACCESSIBILITY FOR CONSTRUCTION AND MAINTENANCE. THREE FEET OF HORIZONTAL SEPARATION IS THE MINIMUM FOR PIPES WITH THREE FEET OF COVER. FOR PIPES INSTALLED AT GREATER DEPTH, PROVIDE AN ADDITIONAL FOOT OF SEPARATION FOR EACH ADDITIONAL FOOT OF DEPTH.
2. THE MINIMUM JOINT SPACING REQUIRED FROM CROSSING FROM OTHER UTILITIES WHILE STILL MAINTAINING MINIMUM VERTICAL SEPARATION.
3. DISTANCES GIVEN ARE FROM OUTSIDE OF PIPE TO OUTSIDE OF PIPE.
4. NO WATER PIPE SHALL PASS THROUGH OR COME INTO CONTACT WITH ANY PART OF SANITARY OR STORM WATER MANHOLE OR STRUCTURES.
5. WATER MAIN SHOULD CROSS ABOVE OTHER PIPES WHENEVER POSSIBLE. WHEN WATER MAIN MUST BE BELOW OTHER UTILITY PIPING, THE MINIMUM SEPARATION SHALL BE 12 INCHES.
6. REFER TO POTABLE WATER PIPING- SECTION 350, III.4.11.

SEPARATION REQUIREMENTS FOR WATER, WASTEWATER AND RECLAIMED WATER MAINS

JANUARY 2023 PLATE W-10

WATER MAIN AND NON-WATER MAIN SEPARATION REQUIREMENTS - NOTES

1. IT IS REQUIRED THAT "WATER MAINS" BE INSTALLED, CLEANED, DISINFECTED AND HAVE A SATISFACTORY BACTERIOLOGICAL SURVEY PERFORMED IN ACCORDANCE WITH THE LATEST APPLICABLE AWWA STANDARDS, CHAPTER 62-555, F.A.C. AND LATEST JEA WATER AND SEWER STANDARDS. FOR THE PURPOSE OF THIS SECTION, THE PHRASE "WATER MAINS" SHALL MEAN MAINS, INCLUDING TREATMENT PLANT PROCESS PIPING, CONVEYING EITHER RAW, PARTIALLY TREATED, OR FINISHED DRINKING WATER; FIRE HYDRANT LEADS; AND SERVICE LINES THAT HAVE AN INSIDE DIAMETER OF THREE (3) INCHES OR GREATER. IN ADDITION, THE PHRASE "RECLAIMED WATER" REFERS TO THE WATER REGULATED UNDER PART III OF CHAPTER 62-610, F.A.C.
2. NEW OR RELOCATED, UNDERGROUND WATER MAINS SHALL BE LAID TO PROVIDE A HORIZONTAL DISTANCE OF AT LEAST THREE (3) FEET BETWEEN THE OUTSIDE OF THE WATER MAIN AND THE OUTSIDE OF ANY EXISTING OR PROPOSED STORM SEWER, STORMWATER FORCE MAIN, OR PIPELINE CONVEYING RECLAIMED WATER.
3. NEW OR RELOCATED, UNDERGROUND WATER MAINS SHALL BE LAID TO PROVIDE A HORIZONTAL DISTANCE OF AT LEAST SIX (6) FEET, AND PREFERABLY TEN (10) FEET, BETWEEN THE OUTSIDE OF THE WATER MAIN AND THE OUTSIDE OF ANY EXISTING OR PROPOSED GRAVITY OR PRESSURE-TYPE SANITARY SEWER, WASTEWATER FORCE MAIN, OR PIPELINE CONVEYING RECLAIMED WATER. THE MINIMUM HORIZONTAL SEPARATION DISTANCE BETWEEN WATER MAINS AND GRAVITY-TYPE SANITARY SEWERS MAY BE REDUCED TO THREE (3) FEET WHERE THE BOTTOM OF THE WATER MAIN IS LAID AT LEAST SIX (6) INCHES ABOVE THE TOP OF THE SEWER (SPECIAL CASE).
4. NEW OR RELOCATED, UNDERGROUND WATER MAINS CROSSING ANY EXISTING OR PROPOSED GRAVITY OR VACUUM-TYPE SANITARY SEWER OR STORM SEWER SHALL BE LAID SO THE OUTSIDE OF THE WATER MAIN IS AT LEAST SIX (6) INCHES, AND PREFERABLE TWELVE (12) INCHES, ABOVE OR AT LEAST TWELVE (12) INCHES BELOW THE OUTSIDE OF THE OTHER PIPELINE. HOWEVER, IT IS PREFERABLE TO LAY THE WATER MAIN ABOVE THE OTHER PIPELINE.
5. NEW OR RELOCATED, UNDERGROUND WATER MAINS CROSSING ANY EXISTING OR PROPOSED PRESSURE-TYPE SANITARY SEWER, WASTEWATER OR STORMWATER FORCE MAIN, OR PIPELINE CONVEYING RECLAIMED WATER SHALL BE LAID SO THE OUTSIDE OF THE WATER MAIN IS A LEAST TWELVE (12) INCHES ABOVE OR BELOW THE OUTSIDE OF THE OTHER PIPELINE. HOWEVER, IT IS PREFERABLE TO LAY THE WATER MAIN ABOVE THE OTHER PIPELINE.
6. AT THE UTILITY CROSSINGS DESCRIBED IN NOTES 4 AND 5 ABOVE, ONE FULL LENGTH OF WATER MAIN PIPE SHALL BE CENTERED ABOVE OR BELOW THE OTHER PIPELINE SO THE WATER MAIN JOINTS WILL BE AS FAR AS POSSIBLE FROM THE OTHER PIPELINE. ALTERNATIVELY, AT SUCH CROSSINGS, THE PIPES SHALL BE ARRANGED SO THAT ALL WATER MAIN JOINTS ARE AT LEAST THREE (3) FEET FROM ALL JOINTS IN VACUUM-TYPE SANITARY SEWERS, STORM SEWERS, STORMWATER FORCE MAINS, OR PIPELINES CONVEYING RECLAIMED WATER, AND AT LEAST SIX (6) FEET FROM ALL JOINTS IN GRAVITY OR PRESSURE-TYPE SANITARY SEWERS, WASTEWATER FORCE MAINS, OR PIPELINE CONVEYING RECLAIMED WATER.
7. NEW OR RELOCATED FIRE HYDRANTS SHALL BE LOCATED SO THAT THE HYDRANTS ARE AT LEAST THREE (3) FEET FROM ANY EXISTING OR PROPOSED STORM SEWER, STORMWATER FORCE MAIN, OR PIPELINE CONVEYING RECLAIMED WATER; AT LEAST THREE (3) FEET, AND PREFERABLY TEN (10) FEET, FROM ANY EXISTING OR PROPOSED VACUUM-TYPE SANITARY SEWER; AT LEAST SIX (6) FEET, AND PREFERABLY TEN (10) FEET, FROM ANY EXISTING OR PROPOSED GRAVITY OR PRESSURE-TYPE SANITARY SEWER OR WASTEWATER FORCE MAIN.
8. WHERE AN UNDERGROUND WATER MAIN IS BEING LAID LESS THAN THE REQUIRED MINIMUM HORIZONTAL DISTANCE FROM ANOTHER PIPELINE AND WHERE AN UNDERGROUND WATER MAIN IS CROSSING ANOTHER PIPELINE AND JOINTS IN THE WATER MAIN ARE BEING LOCATED LESS THAN THE REQUIRED MINIMUM DISTANCE FROM JOINTS IN THE OTHER PIPELINE, THE CONTRACTOR SHALL CONSULT THE DESIGN ENGINEER TO OBTAIN APPROVAL OF ANY ALTERNATIVE CONSTRUCTION METHODS, PRIOR TO CONSTRUCTION.

NOTES ON UTILITY SEPARATION REQUIREMENTS

JANUARY 2023 PLATE W-11

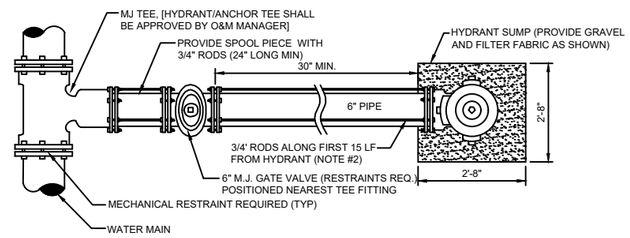

PLAN

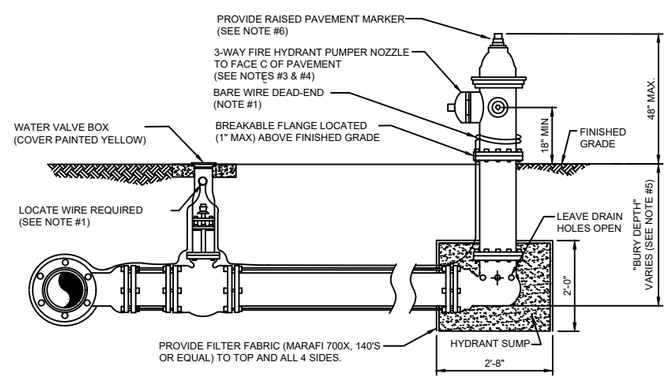

SECTION

NOTES:

1. LOCATE WIRE SHALL BE ROUTED FROM THE VALVE TO THE HYDRANT AS SHOWN ABOVE LEAVING ENOUGH SLACK TO REACH 4' ABOVE FINAL GRADE. THE END OF THE WIRE SHALL BE SECURED TO THE PIPE MAIN. SEE SECTION 350, LOCATE WIRE INSTALLATION PARAGRAPH.
2. FIRE HYDRANTS SHALL BE INSTALLED BETWEEN BACK OF CURB AND FACE OF SIDEWALK AND NOT WITHIN SWALE/DITCH AREAS. THE DISTANCE RANGE FROM EDGE OF ADJACENT PAVEMENT, BACK OF CURB AND FACE OF SIDEWALK SHALL BE IN COMPLIANCE WITH LOCAL COUNTY FIRE DEPARTMENT RULES AND AS APPROVED BY JEA AND APPLICABLE PERMITTING AGENCIES. DISTANCE SHALL BE MEASURED TO THE CLOSEST PART OF THE FIRE HYDRANT (I.E. THE PUMPER NOZZLE). THE MAXIMUM DISTANCE (BACK OF CURB) SHALL BE IN COMPLIANCE WITH LOCAL COUNTY FIRE DEPARTMENT RULES AND AS APPROVED BY JEA. FOR OTHER LOCATION LIMITATIONS SEE PLATES W-10 AND W-11. IF PIPING BETWEEN TEE AND HYDRANT IS LONGER THAN 80 LF, AN ADDITIONAL 6" GATE VALVE IS REQUIRED AT THE HYDRANT LOCATION (PROVIDE 30" SEPARATION). ALL PIPING, VALVES AND FITTINGS ALONG THE HYDRANT BRANCH MAIN WHICH IS WITHIN 15 LF OF THE HYDRANT SHALL BE RESTRAINED UTILIZING ONLY TWO 3/4" DIA (THREADED ENDS) STEEL RODS AND EYE BOLTS (NO JOINT RESTRAINT DEVICES REQUIRED). A SPLIT SERRATED RING WITH RESTRAINT EARS (EBAA 15 PF06 or EQUAL) MAYBE USED IN THIS ASSEMBLY. ALL OTHER JOINTS ALONG THE HYDRANT BRANCH MAIN OUTSIDE OF THE FIRST 15 LF SHALL INCLUDE JOINT RESTRAINTS.
3. OPERATION OF THE FIRE HYDRANT SHALL BE EITHER FULL OPEN POSITION OR TOTALLY CLOSED POSITION. THE HYDRANT SHALL NOT BE UTILIZED TO THROTTLE OUTLET FLOW.
4. PRIOR TO PROJECT FINAL INSPECTION, THE HYDRANT AND ALL ABOVE GROUND PIPING SHALL BE RE-OILED, GREASED AND REPAINTED (RUS- KIL ENAMEL-INTERNATIONAL YELLOW OR EQUAL). PRIVATELY OWNED AND MAINTAINED FIRE HYDRANTS SHALL BE PAINTED RED.
5. FIRE HYDRANTS SHALL BE ORDERED WITH PROPER "BURY DEPTH" TO MEET ACTUAL FIELD CONDITIONS. THIS IS ESPECIALLY IMPORTANT FOR BRANCH LINES WHICH TEE-OFF A 12" OR LARGER WATER MAIN. UNLESS APPROVED OTHERWISE BY JEA, THE INSTALLATION OF (45°) BENDS IS NOT ACCEPTABLE WHEN UTILIZED TO CORRECT AN IMPROPERLY FURNISHED HYDRANT. THE USE OF HYDRANT EXTENSIONS SHOULD BE MINIMIZED.
6. BLUE REFLECTIVE MARKERS SHALL BE INSTALLED IN SUCH A MANNER THAT THE REFLECTIVE FACE OF THE MARKER IS PERPENDICULAR TO A LINE PARALLEL TO THE ROADWAY CENTERLINE. THE BLUE REFLECTIVE MARKERS SHALL BE PLACED IN THE CENTER OF THE TRAVEL LANE, DIRECTLY ACROSS FROM AND ADJACENT TO EACH FIRE HYDRANT.

FIRE HYDRANT INSTALLATION USING MECHANICAL JOINT TEE

JANUARY 2023 PLATE W-13

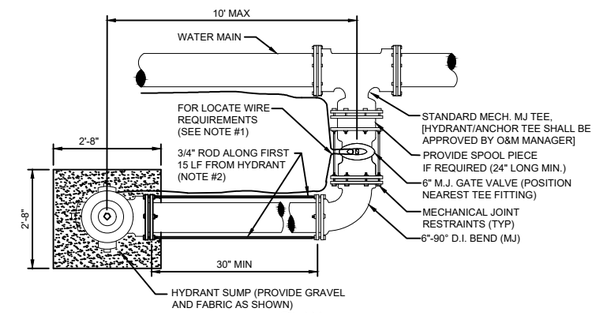

PLAN

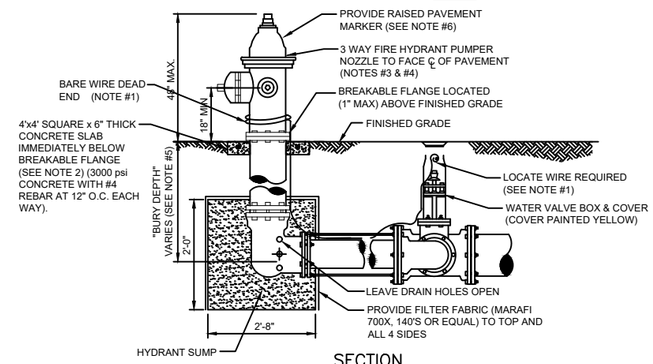

SECTION

NOTES:

1. LOCATE WIRE SHALL BE ROUTED FROM THE VALVE TO THE HYDRANT AS SHOWN ABOVE LEAVING ENOUGH SLACK TO REACH 4' ABOVE FINAL GRADE. THE END OF THE WIRE SHALL BE SECURED TO THE PIPE MAIN. SEE SECTION 350, LOCATE WIRE INSTALLATION PARAGRAPH.
2. FIRE HYDRANTS SHALL BE INSTALLED BETWEEN BACK OF CURB AND FACE OF SIDEWALK. ALL HYDRANTS SHALL BE LOCATED NO LESS THAN THREE (3) FEET FROM THE EDGE OF PAVEMENT OR BACK OF CURB OF THE ADJACENT ROADWAY AND NO LESS THAN THREE (3) FEET FROM ANY PHYSICAL FEATURE WHICH MAY OBSTRUCT ACCESS OR VIEW OF ANY HYDRANT UNLESS OTHERWISE APPROVED BY THE JEA. THE MAXIMUM DISTANCE (BACK OF CURB) SHALL BE IN COMPLIANCE WITH LOCAL COUNTY FIRE DEPARTMENT RULES AND AS APPROVED BY JEA. FOR OTHER LOCATION LIMITATIONS SEE PLATES W-10 AND W-11. IF PIPING BETWEEN TEE AND HYDRANT IS LONGER THAN 80 LF, AN ADDITIONAL 6" GATE VALVE IS REQUIRED AT THE HYDRANT LOCATION (PROVIDE 30" SEPARATION). ALL PIPING, VALVES AND FITTINGS ALONG THE HYDRANT BRANCH MAIN WHICH IS WITHIN 15 LF OF THE HYDRANT SHALL BE RESTRAINED UTILIZING ONLY TWO 3/4" DIA (THREADED ENDS) STEEL RODS AND EYE BOLTS (NO JOINT RESTRAINT DEVICES REQUIRED). A SPLIT SERRATED RING WITH RESTRAINT EARS (EBAA 15 PF06 or EQUAL) MAYBE USED IN THIS ASSEMBLY. ALL OTHER JOINTS ALONG THE HYDRANT BRANCH MAIN OUTSIDE OF THE FIRST 15 LF SHALL INCLUDE JOINT RESTRAINTS.
3. OPERATION OF THE FIRE HYDRANT SHALL BE EITHER FULL OPEN POSITION OR TOTALLY CLOSED POSITION. THE HYDRANT SHALL NOT BE UTILIZED TO THROTTLE OUTLET FLOW.
4. PRIOR TO PROJECT FINAL INSPECTION, THE HYDRANT AND ALL ABOVE GROUND PIPING SHALL BE RE-OILED, GREASED AND REPAINTED (RUS- KIL ENAMEL-INTERNATIONAL YELLOW OR EQUAL). PRIVATELY OWNED AND MAINTAINED FIRE HYDRANTS SHALL BE PAINTED RED.
5. FIRE HYDRANTS SHALL BE ORDERED WITH PROPER "BURY DEPTH" TO MEET ACTUAL FIELD CONDITIONS. THIS IS ESPECIALLY IMPORTANT FOR BRANCH LINES WHICH TEE-OFF A 12" OR LARGER WATER MAIN. UNLESS APPROVED OTHERWISE BY JEA, THE INSTALLATION OF (45°) BENDS IS NOT ACCEPTABLE WHEN UTILIZED TO CORRECT AN IMPROPERLY FURNISHED HYDRANT. THE USE OF HYDRANT EXTENSIONS SHOULD BE MINIMIZED.
6. BLUE REFLECTIVE MARKERS SHALL BE INSTALLED IN SUCH A MANNER THAT THE REFLECTIVE FACE OF THE MARKER IS PERPENDICULAR TO A LINE PARALLEL TO THE ROADWAY CENTERLINE. THE BLUE REFLECTIVE MARKERS SHALL BE PLACED IN THE CENTER OF THE TRAVEL LANE, DIRECTLY ACROSS FROM AND ADJACENT TO EACH FIRE HYDRANT.

FIRE HYDRANT INSTALLATION LIMITED SPACE

JANUARY 2023 PLATE W-14

TOCOI Engineering, LLC
714 NORTH ORANGE AVENUE, GREEN COVE SPRINGS, FL 32043
PH: 904-215-1388 E.B. NUMBER: 26383
ENGINEER OF RECORD CHARLES SOHM
FLORIDA REGISTRATION NUMBER: 79289

TYLER PLAZA WEST FOR TYLER PLAZA WEST, LLC

JEA UTILITY DETAILS

REVISIONS

PLOT DATE:
DRAWN BY:
DESIGNED BY:
CHECKED BY:
SCALE:
JOB NO.:

SHEET NO. 17F

Date: 11/8/23 Time: 5:41 PM DWG Name: \\TE-GCS\01-Projects\21-470 Tyler West Plaza 2021\03-CADD\05_21-470 JEA UTILITY DETAILS.dwg Layout: 17F

A LOCATE WIRE SHALL BE PLACED ON SERVICES 10FT OR GREATER.

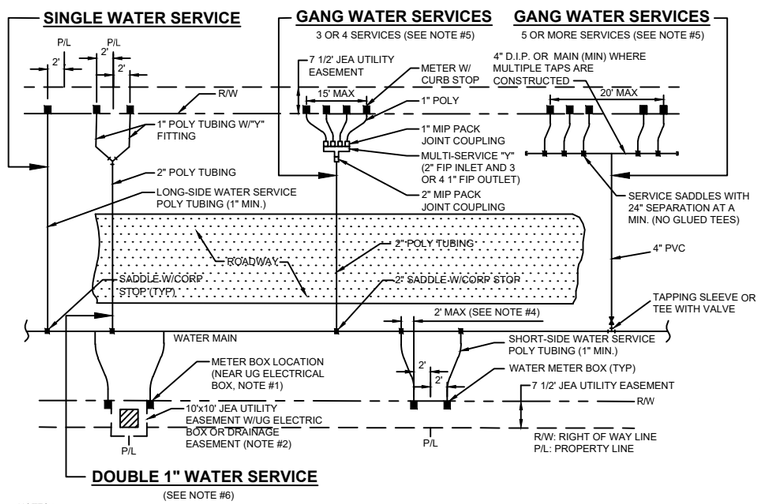

NOTES :

1. THE SKETCHES ABOVE INDICATE TYPICAL WATER SERVICE AND METER BOX LOCATIONS. ACTUAL LOCATIONS OF BOXES MAY VARY SLIGHTLY ACCORDING TO FIELD CONDITIONS ENCOUNTERED. TYPICALLY, THE METER BOX SHALL LOCATED AT THE R/W LINE BUT INSIDE THE 7 1/2' ELECTRIC EASEMENT.
2. UNLESS SPECIFIED OTHERWISE BY THE APPLICABLE COUNTY (NASSAU, CLAY OR ST. JOHNS COUNTY), THE METER BOX SHALL BE LOCATED IN THE JEA 7 1/2' UTILITY EASEMENT, AND TWO FEET INSIDE OF THE PROLONGATION OF ONE OF THE SIDE PROPERTY LINES. IF A CONFLICT EXISTS WITH OTHER UTILITIES, THE METER BOX MAY BE ADJUSTED TO FOUR FEET (MAX.) INSIDE PROPERTY LINES (IN LIEU OF TWO FEET). UNLESS APPROVED OTHERWISE BY JEA, THE WATER METER BOX SHALL BE LOCATED IN NON-TRAFFIC AREAS (NOT IN SIDEWALKS OR DRIVEWAYS). IF THE METER BOX IS APPROVED BY JEA TO BE LOCATED IN A DRIVEWAY OR SIDEWALK, THEN THE CONSTRUCTION SHALL MEET STANDARD DETAIL NUMBERS W-3&4, AT A MINIMUM (SEE W-3 AND W-4 FOR THE REQUIREMENTS OF SPECIAL ORDER POLYMER BOX AND TOP) . SET TOP OF BOX AT FINISHED GRADE. IF AN UNAPPROVED METER BOX IS IDENTIFIED BY JEA, THEN THE CONTRACTOR OR CUSTOMER SHALL BE RESPONSIBLE FOR THE COST OF RELOCATING ANY METER BOX WHICH IS LOCATED IN THE SIDEWALK OR DRIVEWAY OR THE COST TO PROVIDE THE CORRECT METER BOX. JEA SHALL APPROVE ALL DEVIATIONS TO THE ABOVE PRIOR TO CONSTRUCTION.
3. IF DRAINAGE OR OTHER EASEMENT LOCATED BETWEEN LOTS, METER BOXES SHALL BE LOCATED AT THE EASEMENT LINE BUT OUTSIDE THE EASEMENT AREA.
4. FOR SINGLE SERVICES, THE HORIZONTAL DISTANCE (PERPENDICULAR TO THE MAIN)BETWEEN THE SERVICES SADDLE AND THE METER BOX SHALL BE 2 FEET MAXIMUM. FOR DOUBLE 1" SERVICES, THE 2" POLY MAIN SHALL BE LOCATED CENTERED BETWEEN THE TWO METER BOXES. LOCATE WIRE IS REQUIRED ON ALL SERVICES 10' OR GREATER IN LENGTH. IF LOCATE WIRE IS REQUIRED, THE WIRE SHALL RUN FROM THE METER BOX (W/ PIG TAIL) TO THE MAIN (DEAD END SHALL BE TAPED WITH NO CONNECTION TO MAIN WIRE WITH THE LAST 24 INCHES STRIPED OF INSULATION/BARE WIRE AS GROUND). ALL EXCEPTIONS TO THIS REQUIREMENT MUST BE APPROVED BY JEA. THIS WILL ASSIST IN LOCATING EXISTING SERVICE LINES IN THE FUTURE.
5. GANG WATER SERVICES: FOR 3 OR 4 SERVICES IN ONE AREA, A DUCTICLE IRON PIPE (D.I.P.) WATER MAIN EXTENSION W/LOCATE WIRE MAY BE UTILIZED ON EITHER SHORT-SIDE OR LONG SIDE SERVICES WHERE SHOWN ON THE DRAWINGS. LOCATE WIRE SHALL EXTEND FROM ONE METER BOX TO CORP STOP AT WATER MAIN. FOR 5 OR MORE SERVICES IN ONE AREA, A WATER MAIN EXTENSION W/LOCATE WIRE MAY BE UTILIZED ON EITHER SHORT-SIDE OR LONG SIDE SERVICES WHERE SHOWN ON THE DRAWINGS (TAPS STAGGERED AND AT 2 FEET ON CENTER-MIN). FOR WATER SUPPLY HEADERS WHERE 5 OR MORE TAPS ARE CONSTRUCTED, THE HEADER PIPE SHALL BE 4" AT A MINIMUM. EXAMPLE: CONSTRUCT A 4" MAIN PVC CROSSING THE STREET FOR 5 RESIDENTIAL CUSTOMERS, UTILIZING 4" DIP, 4" PIPE, 4"X1" SADDLES AND 1" CORP STOPS (NO GLUED TEE FITTINGS). THE 4" OR LARGER D.I.P. WATER MAIN MUST BE SIZED AND DESIGNED BY THE P.E. ENGINEER.
6. DOUBLE 1" WATER SERVICES IS ALLOWED FOR SHORT SIDE OR LONG SIDE SERVICES AND WHERE SHOWN ON THE DRAWINGS.
7. A 1" IRRIGATION SERVICE MAYBE TAPPED INTO THE (1" MIN) DOMESTIC WATER SERVICE LINE (WHICH SERVES THE SAME CUSTOMER) UTILIZING A 1" BRONZE "Y" FITTING. (IN AREAS WHERE NO RECLAIMED WATER IS AVAILABLE).
8. No 2" AND SMALLER WATER SERVICE TAPS PERMITTED ON WATER MAINS WHICH ARE 20" AND LARGER SIZE.
9. RECLAIMED WATER METER BOXES OR SERVICES SHALL BE CONSTRUCTED SIMILAR TO THE ABOVE AND SHALL BE LOCATED, AT A MIN. OF 10' FROM THE POTABLE WATER SERVICE, AND/OR BOX AND NOT ALLOWED IN CONCRETE OR ASPHALT UNLESS APPROVED OTHERWISE BY JEA.
10. SERVICE SIZE SHALL BE SAME AS THE METER SIZE.

WATER OR RECLAIM SERVICE INSTALLATIONS 2" AND SMALLER METER

JANUARY 2023 PLATE W-1

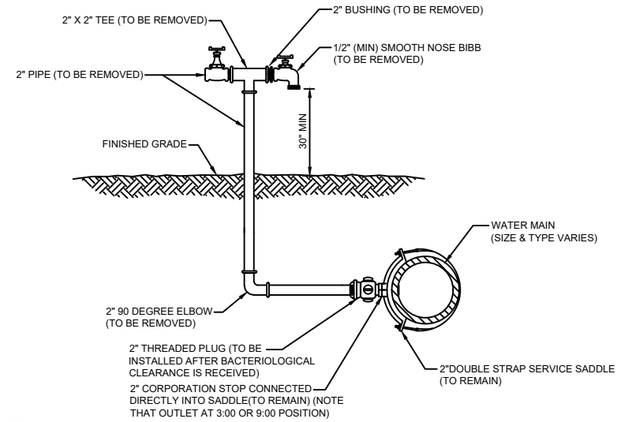

NOTES:

1. LOCATION OF SAMPLE POINT BIBB SHALL NOT BE WITHIN THE ROADWAY BUT ROUTED TO THE ROADWAY SHOULDERS (NON-TRAFFIC AREAS).
2. ALL PIPE & FITTING SHALL BE GALVANIZED MATERIAL OR PVC (S-40).
3. THE CONTRACTOR SHALL BE RESPONSIBLE FOR THE REMOVAL OF ALL TEMPORARY PIPING & FITTING (AS NOTED) AFTER BACTERIOLOGICAL CLEARANCE IS RECEIVED
4. THE CONTRACTOR SHALL COMPLY WITH ALL JEA RULES AND POLICES AS OUTLINED BY THE JEA'S ENVIRONMENTAL RESPONSE COORDINATOR (ERC) AND OTHER ASSOCIATED JEA STANDARDS.

2" TEMPORARY SAMPLE TAP FOR STUB OUT

JANUARY 2023 PLATE W-26

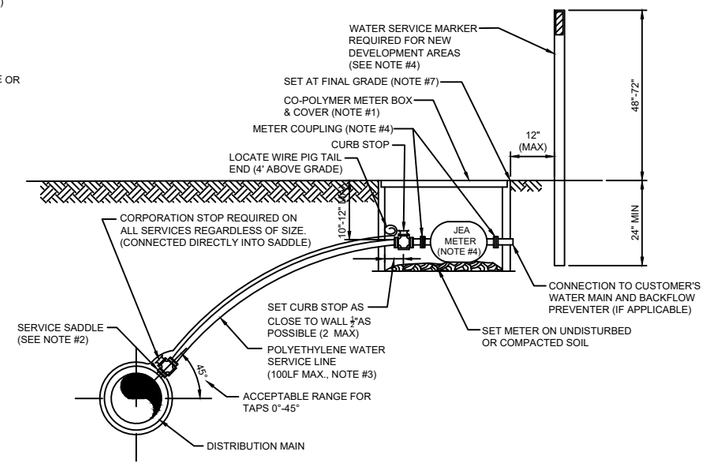

NOTES:

1. SEE PLATE W-1 FOR METER LOCATION REQUIREMENTS.
2. SINGLE BAND SADDLES SHALL BE UTILIZED ON NEW 1" WATER SERVICES WHICH ARE INSTALLED ON A DRY 10" SIZE OR SMALLER WATER MAIN (NEW WATER MAIN CONSTRUCTION). FOR WET TAPS OR WATER MAINS 12" SIZE AND LARGER, A DOUBLE BAND SADDLE IS REQUIRED. BRASS SADDLES MAY BE UTILIZED ON NEW 1 INCH AND SMALLER WATER SERVICES WHICH ARE INSTALLED ON A DRY 10 INCH OR SMALLER PVC WATER MAIN.
3. NO OPEN CUT UNDER ROADWAY PAVING ALLOWED UNLESS THE ROADWAY IS BEING RECONSTRUCTED OR IF DIRECTED OTHERWISE BY J.E.A. CONSTRUCT POLY LINE WITH 24" (MIN.) COVER UNDER ROADWAYS. THE POLY WATER SERVICE LINE SHALL BE SAME SIZE AS THE METER (1" MINIMUM) AND BE INSTALLED PERPENDICULAR TO THE MAIN AND NOT EXCEED 100LF UNLESS APPROVED OTHERWISE BY JEA.
4. INSTALL PVC PLUG IN ALL CURB STOPS IF WATER SERVICE IS "NOT IN USE" (I.E.: IF NO METER IS INSTALLED). WATER SERVICES SERVING VACANT LOTS (SERVICE NOT IN USE), SHALL INCLUDE A "W" CUT INTO THE CURB (CLOSEST TO THE METER BOX), AND PAINTED BLUE (PAINTED PURPLE FOR RECLAIMED WATER). IN ADDITION, FOR NEW DEVELOPMENT AREAS WHERE THE WATER SERVICE IS "NOT IN USE", A LANDSCAPE TIMBER OR 3x3 MIN. P.T. POST (TOP PAINTED BLUE OR PURPLE FOR RECLAIMED WATER). THE REMOVAL OR TRANSFER OF A WATER SERVICE SHALL INCLUDE BRASS METER COUPLINGS (HEX ON BARREL TYPE).
5. NO 2" AND SMALLER WATER SERVICE TAPS PERMITTED ON WATER MAINS WHICH ARE 20" AND LARGER SIZE.
6. THE CONTRACTOR SHALL BE RESPONSIBLE FOR THE REPAIR OR REPLACEMENT OF THE METER OR ELECTRONIC DEVICES IF DAMAGED BY THE CONTRACTOR DURING THE CONSTRUCTION PERIOD.
7. METER BOX AND TOP SHALL BE CLEAR OF ALL DEBRIS TO ALLOW FULL ACCESS TO BOX (i.e. NO DIRT, TRASH OR OTHER DEBRIS PLACED ON TOP OF BOX).
8. LOCATE WIRING REQUIRED ON ALL SERVICES 10' OR GREATER IN LENGTH. SEE PLATE W-44.

WATER SERVICE DETAIL- 2" AND SMALLER METER

JANUARY 2023 PLATE W-2

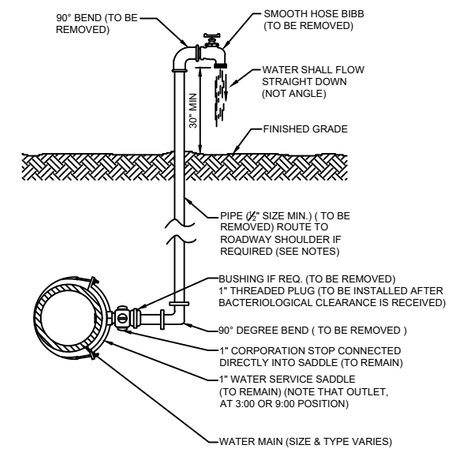

NOTES:

1. LOCATION OF SAMPLE POINT BIBB SHALL NOT BE WITHIN THE ROADWAY BUT ROUTED TO THE ROADWAY SHOULDERS (NON-TRAFFIC AREAS).
2. THE CONTRACTOR SHALL BE RESPONSIBLE FOR THE REMOVAL OF ALL TEMPORARY PIPING & FITTINGS (AS NOTED), AFTER BACTERIOLOGICAL CLEARANCE IS RECEIVED.
3. PIPE AND FITTINGS SHALL BE PVC (SCH. 40) OR GALV. MATERIAL.
4. THE USE OF THE ABOVE CONSTRUCTION FOR A TEMPORARY SAMPLE POINT SHALL BE LIMITED TO AREAS WHERE A SAMPLE TAP BY ALTERNATIVE METHODS (SEE W-24) IS NOT FEASIBLE OR IF DIRECTED OTHERWISE BY JEA.
5. THE CONTRACTOR SHALL COMPLY WITH ALL JEA RULES AND POLICIES AS AS OUTLINED BY JEA'S ENVIRONMENTAL RESPONSE COORDINATOR (ERC) AND OTHER ASSOCIATED JEA STANDARDS.

TEMPORARY SAMPLE TAP

JANUARY 2023 PLATE W-25

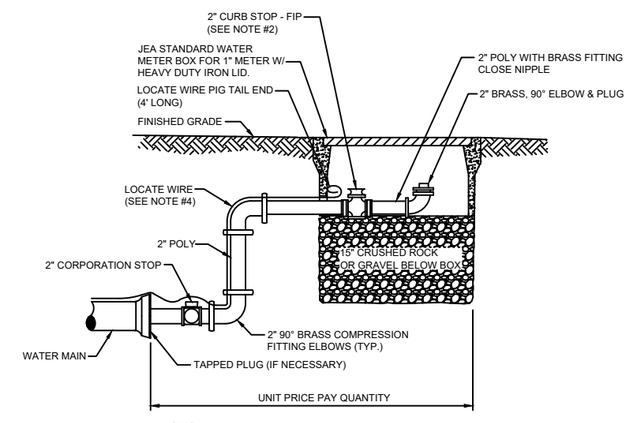

NOTES:

1. PIPE SHALL BE POLYETHYLENE. FITTINGS SHALL BE BRASS.
2. THE 2" CURB STOP SHALL BE ALL BRONZE. FITTINGS SHALL BE BRASS.
3. ANY RECLAIMED WATER VALVE SHALL HAVE RECLAIMED EMBLEM.
4. LOCATE WIRE FOR 10' OR GREATER IN LENGTH.
5. CANNOT BE PLACED UNDER CONCRETE OR PAVEMENT.
6. PLACE 2 FEET PAST LAST WATER MAIN SERVICE CONNECTION.

FLUSHING VALVE BELOW GRADE

JANUARY 2023 PLATE W-28

TOCOL Engineering, LLC
714 NORTH ORANGE AVENUE, GREEN COVE SPRINGS, FL 32043
PH: 904-215-1388 E.B. NUMBER: 26383

ENGINEER OF RECORD
CHARLES SOHM
FLORIDA
REGISTRATION NUMBER: 79289

TYLER PLAZA WEST
FOR
TYLER PLAZA WEST, LLC

JEA UTILITY DETAILS

REVISIONS

PLOT DATE:
DRAWN BY:
DESIGNED BY:
CHECKED BY:
SCALE:
JOB NO.:

SHEET NO.
17G

Date: 11/8/23 Time: 5:41 PM DWG Name: \\TE-GCS\01-Projects\21-470 Tyler West Plaza 2021\03-CADD\05_21-470 JEA UTILITY DETAILS.dwg Layout: 17G

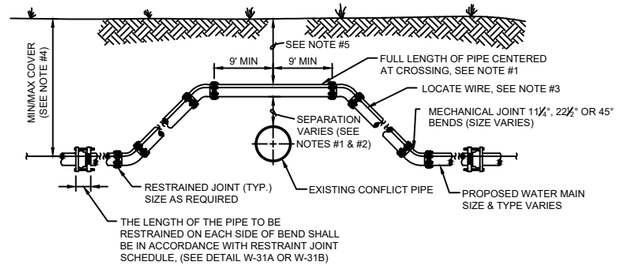

CASE "A" CROSSING

NOTES:

1. THE SOILS BETWEEN THE NEW MAIN AND THE CONFLICT PIPE SHALL BE COMPACTED TO 98% OF THE MAXIMUM DENSITY AS DETERMINED BY THE LABORATORY MODIFIED PROCTOR TEST, ASTM D 1557.
2. FOR MINIMUM VERTICAL SEPARATION REQUIREMENTS SEE DETAIL (W-10 AND W-11).
3. LOCATING WIRE REQUIRED: SEE DETAIL W-44.
4. THE COVER FOR PIPING LESS THAN 24" SIZE SHALL BE 30" (MIN) IN UNPAVED AREAS, 36" (MIN) IN PAVED AREAS AND A MAXIMUM COVER OF 60", UNLESS APPROVED BY JEA. THE COVER FOR PIPING 24" SIZE AND LARGER SHALL BE 36" (MIN) IN PAVED AND UNPAVED AREAS AND A MAXIMUM COVER OF 84", UNLESS APPROVED BY JEA.
5. IF UTILITY CONFLICT IS LOCATED IN A NON-TRAFFIC AREA (NO TRAFFIC LOADS) AND THE NEW PIPE IS D.I.P., THEN THE MINIMUM COVER MAY BE REDUCED TO 24 INCHES (ONLY IN THE AREA OF THE CONFLICT).

ADJUSTMENT OVER EXISTING UTILITIES MECHANICAL RESTRAINTS

JANUARY 2023 PLATE W-32

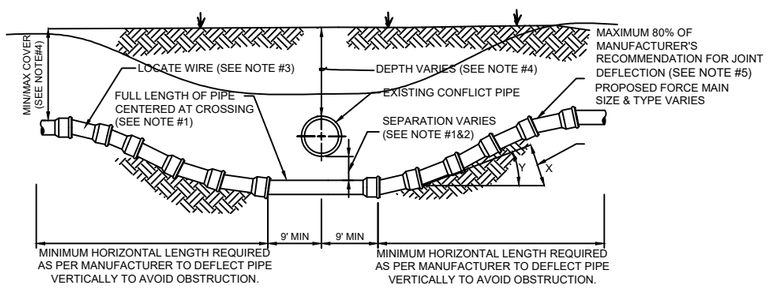

CASE "B" CROSSING

NOTES:

1. IF EXISTING CONFLICT PIPE IS A WATER MAIN, 12-INCHES OF SEPARATION IS REQUIRED. A FULL LENGTH OF PIPE SHALL BE CENTERED OVER EXISTING UTILITY MAIN TO PROVIDE MAXIMUM JOINT SPACING FOR ALL CROSSING.
2. FOR OTHER LOCATION LIMITATIONS SEE DETAIL (W-10 & W-11).
3. LOCATING WIRE REQUIRED: SEE DETAIL W-44.
4. THE COVER OVER ALL PIPING LESS THAN 24" SIZE SHALL BE A MINIMUM OF 30" IN UNPAVED AREAS AND 36" IN PAVED AREAS WITH A MAXIMUM COVER OF 60" UNLESS APPROVED OTHERWISE BY JEA. COVER FOR PIPING 24" SIZE AND LARGER SHALL BE MINIMUM OF 36" (PAVED AND UNPAVED) AND MAXIMUM OF 84" UNLESS APPROVED OTHERWISE BY JEA. THE SOILS BETWEEN THE NEW MAIN AND THE CONFLICT PIPE SHALL BE COMPACTED TO 98% OF THE MAXIMUM DENSITY AS DETERMINED BY THE LABORATORY MODIFIED PROCTOR TEST ASTM D 1557.
5. JEA ONLY ALLOWS 80% OF THE PIPE MANUFACTURER'S RECOMMENDATION FOR JOINT DEFLECTION. BENDING THE PIPE BARREL IS NOT ALLOWED. UNLESS OTHERWISE APPROVED BY JEA, THE MAXIMUM ARE LISTED IN TABLE BELOW. ONLY MANUAL FORCE CAN BE UTILIZED TO OBTAIN THESE JOINT DEFLECTION. ALL OFFSETS ARE BASED ON MINIMUM 20LF PIPE LENGTH.

MAXIMUM ALLOWED OFFSET FOR PIPE BY JOINT DEFLECTION

PVC PIPE

PIPE SIZE (IN.)	(X) MAX. OFFSET (IN.)	(Y) ANGLE AT ONE BELL	RESULTING RADIUS OF CURVE WITH 20FT. LENGTHS
2	30	7°	158 FT
4	10	2.4°	480 FT
6	10	2.4°	480 FT
8	10	2.4°	480 FT
10	10	2.4°	480 FT
12	8.5	2°	564 FT
14 - 24	5	1.2°	960 FT
30 - 48	3.25	0.8°	1477 FT

DUCTILE IRON PIPE (Mechanical Joint)

PIPE SIZE (IN.)	(X) MAX. OFFSET (IN.)	(Y) ANGLE AT ONE BELL	RESULTING RADIUS OF CURVE WITH 20FT. LENGTHS
-	-	-	-
4	27	6.5°	177 FT
6	24	5.7°	200 FT
8 - 12	17.5	4.2°	273 FT
14 - 16	12	2.9°	400 FT
18 - 20	10	2.4°	477 FT
24 - 30	8	1.9°	600 FT
36	7	1.7°	687 FT
42 - 48	6.7	1.6°	716 FT

ADJUSTMENT UNDER EXISTING UTILITIES PIPE JOINT DEFLECTION

JANUARY 2023 PLATE W-40

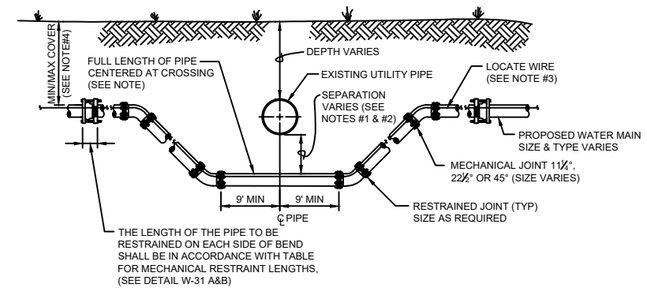

CASE "B" CROSSING

NOTES:

1. THE SOILS BETWEEN THE NEW MAIN AND THE CONFLICT PIPE SHALL BE COMPACTED TO 98% OF THE MAXIMUM DENSITY AS DETERMINED BY THE LABORATORY MODIFIED PROCTOR TEST, ASTM D 1557
2. FOR MINIMUM VERTICAL SEPARATION REQUIREMENTS SEE DETAILS (W-10 AND W-11)
3. LOCATING WIRE REQUIRED: SEE DETAIL W-44.
4. THE COVER FOR PIPING LESS THAN 24" SIZE SHALL BE 30" (MIN) IN UNPAVED AREA, 36" (MIN) IN PAVED AREAS AND A MAXIMUM COVER OF 60", UNLESS APPROVED BY JEA. THE COVER FOR PIPING 24" SIZE AND LARGER SHALL BE 36" (MIN) IN PAVED AND UNPAVED AREAS AND A MAXIMUM COVER OF 84", UNLESS APPROVED BY JEA.
5. IN LOCATIONS WHERE WATER/RECLAIM MAINS CROSS UNDER A BOX-CULVERT, OR 36-INCH DIAMETER AND LARGER STORM WATER MAIN, JEA WILL REQUIRE DIP TO BE UTILIZED FOR THE MAIN.

ADJUSTMENT UNDER EXISTING UTILITIES MECHANICAL RESTRAINTS

JANUARY 2023 PLATE W-34

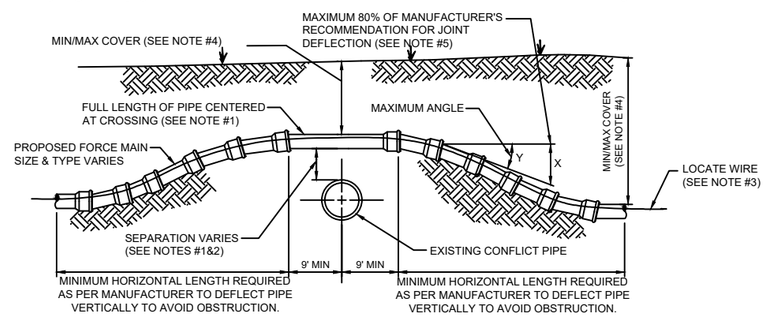

CASE "A" CROSSING

NOTES:

1. IF EXISTING CONFLICT PIPE IS A WATER MAIN, 12-INCHES OF SEPARATION IS REQUIRED. A FULL LENGTH OF PIPE SHALL BE CENTERED OVER EXISTING UTILITY MAIN TO PROVIDE MAXIMUM JOINT SPACING FOR ALL CROSSING.
2. FOR OTHER LOCATION LIMITATIONS SEE DETAIL (S-10 & W-11).
3. LOCATING WIRE REQUIRED: SEE DETAIL W-44.
4. THE COVER OVER ALL PIPING LESS THAN 24" SIZE SHALL BE A MINIMUM OF 30" IN UNPAVED AREAS AND 36" IN PAVED AREAS WITH A MAXIMUM COVER OF 60" UNLESS APPROVED OTHERWISE BY JEA. COVER FOR PIPING 24" SIZE AND LARGER SHALL BE MINIMUM OF 36" (PAVED AND UNPAVED) AND MAXIMUM OF 84" UNLESS APPROVED OTHERWISE BY JEA. THE SOILS BETWEEN THE NEW MAIN AND THE CONFLICT PIPE SHALL BE COMPACTED TO 98% OF THE MAXIMUM DENSITY AS DETERMINED BY THE LABORATORY MODIFIED PROCTOR TEST ASTM D 1557.
5. JEA ONLY ALLOWS 80% OF THE PIPE MANUFACTURER'S RECOMMENDATION FOR JOINT DEFLECTION. BENDING THE PIPE BARREL IS NOT ALLOWED. UNLESS OTHERWISE APPROVED BY JEA, THE MAXIMUM ARE LISTED IN TABLE BELOW. ONLY MANUAL FORCE CAN BE UTILIZED TO OBTAIN THESE JOINT DEFLECTION. ALL OFFSETS ARE BASED ON MINIMUM 20LF PIPE LENGTH.

MAXIMUM ALLOWED OFFSET FOR PIPE BY JOINT DEFLECTION

PVC PIPE

PIPE SIZE (IN.)	(X) MAX. OFFSET (IN.)	(Y) ANGLE AT ONE BELL	RESULTING RADIUS OF CURVE WITH 20FT. LENGTHS
2	30	7°	158 FT
4	10	2.4°	480 FT
6	10	2.4°	480 FT
8	10	2.4°	480 FT
10	10	2.4°	480 FT
12	8.5	2°	564 FT
14 - 24	5	1.2°	960 FT
30 - 48	3.25	0.8°	1477 FT

DUCTILE IRON PIPE (Mechanical Joint)

PIPE SIZE (IN.)	(X) MAX. OFFSET (IN.)	(Y) ANGLE AT ONE BELL	RESULTING RADIUS OF CURVE WITH 20FT. LENGTHS
-	-	-	-
4	27	6.5°	177 FT
6	24	5.7°	200 FT
8 - 12	17.5	4.2°	273 FT
14 - 16	12	2.9°	400 FT
18 - 20	10	2.4°	477 FT
24 - 30	8	1.9°	600 FT
36	7	1.7°	687 FT
42 - 48	6.7	1.6°	716 FT

ADJUSTMENT OVER EXISTING UTILITIES PIPE JOINT DEFLECTION

JANUARY 2023 PLATE W-41

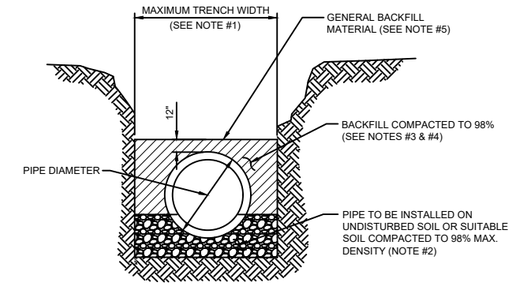

TYPICAL TRENCH

NOTES:

1. TRENCH SIDES SHALL BE APPROXIMATELY VERTICAL BETWEEN AN ELEVATION OF 1 FOOT ABOVE THE TOP OF THE PIPE AND THE CENTER LINE OF THE PIPE; OTHERWISE, TRENCH SIDES SHALL BE AS VERTICAL AS POSSIBLE OR AS REQUIRED BY OSHA STANDARDS. REFER TO THE MEASUREMENT AND PAYMENT SECTION (SECTION #801, PARAGRAPH #4)) TO DETERMINE MAXIMUM PAYLINE WIDTHS.
2. BELL HOLE SHALL BE DUG TO PERMIT THE ENTIRE STRAIGHT BARREL OF THE PIPE TO REST ON THE UNDISTURBED TRENCH BOTTOM. BOULDERS OR LOOSE ROCKS LARGER THAN 3/4 INCH IN SIZE WILL NOT BE PERMITTED IN BACKFILL UP TO 1 FOOT ABOVE THE TOP OF THE PIPE.
3. BACK FILL MATERIAL UP TO A LEVEL OF 1 FOOT OVER THE PIPE SHALL CONSIST OF AASHTO CLASS A-3 SOIL (SUITABLE SOIL) AND SHALL EXCLUDE CLAY MATERIALS AND LOOSE ROCKS LARGER THAN 3/4 INCH SIZE.
4. BACKFILL MATERIAL UP TO A LEVEL 1 FOOT OVER THE TOP OF PIPE OR BOTTOM OF STRUCTURES SHALL BE PLACED IN 6 INCH COMPACTED THICKNESS LAYERS AND SHALL BE COMPACTED TO 98% OF IT'S MAXIMUM DENSITY AS DETERMINED BY THE LABORATORY MODIFIED PROCTOR TEST, ASTM D1557.
5. SEE " EXCAVATION AND EARTHWORK", SECTION 408 FOR ADDITIONAL REQUIREMENTS INCLUDING REMOVAL AND REPLACEMENT OF UNSUITABLE SOILS, DEWATERING, COMPACTION REQUIREMENTS AND DENSITY TESTING OF COMPACTED SOILS.

OPEN CUT TRENCH FOR PRESSURE PIPE

JANUARY 2023 IN CITY RIGHT OF WAY PLATE W-42

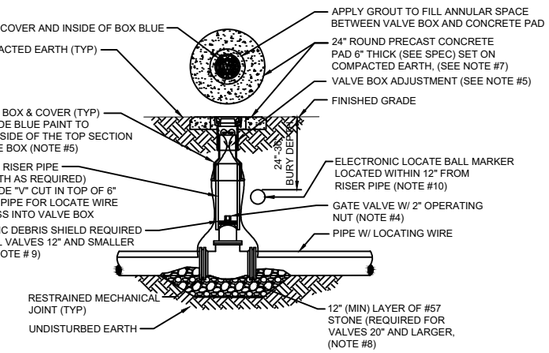

NOTES:

1. FOR UNPAVED LOCATIONS, A PRECAST CONCRETE VALVE PAD SHALL BE PROVIDED AND INSTALLED FLUSH WITH GRADE. CONCRETE PAD IS NOT REQUIRED FOR VALVE LOCATED IN THE ROADWAY, UNLESS SHOWN OR NOTED OTHERWISE.
2. LOCATING WIRE IS REQUIRED ON ALL PRESSURE PIPING (SEE DETAILW-44).
3. A "V" CUT SHALL BE CARVED IN THE CURB CLOSEST/ADJACENT/(ASPHALT IF NO CURB) TO ALL BELOW GRADE VALVES. THE "V" CUT IS TO BE PAINTED BLUE WATER/PURPLE RECLAIMED.
4. IN PAVED AREAS, INSTALL VALVE AT A DEPTH TO ALLOW A 12" MIN. DISTANCE BETWEEN THE VALVE COVER PLATE AND THE TOP OF THE VALVE OPERATING NUT. OUTSIDE OF PAVED AREAS (GRASS), INSTALL VALVE AT A DEPTH TO ALLOW A 6" MINIMUM DISTANCE BETWEEN THE VALVE COVER AND THE TOP OF THE VALVE OPERATING NUT. OPERATING NUT/STEM EXTENSION SHALL BE PROVIDED (WHERE APPLICABLE) SO THAT THE OPERATING NUT WILL BE NO MORE THAN 30 INCHES BELOW FINISHED GRADE.
5. FOR NEW CONSTRUCTION, THE VALVE BOX SHALL BE ADJUSTED TO MIDRANGE TO ALLOW FOR FUTURE BOX ADJUSTMENTS. ROUTE LOCATE WIRES THRU A "V" CUT IN THE TOP OF THE 6" PVC RISER PIPE FOR LOCATE WIRE ACCESS INTO VALVE BOX. THE LOCATE WIRES WITH A 24" LONG PIG-TAIL AT THE TOP SHALL BE CONNECTED TOGETHER WITH A WIRE NUT.
6. BRASS IDENTIFICATION TAG INDICATING "WATER", VALVE SIZE, DIRECTION AND TURNS TO OPEN & VALVE TYPE. PROVIDE A $\frac{1}{4}$" HOLE IN BRASS TAG AND ATTACH TAG (TWIST WIRE AROUND TAG) TO THE END OF THE LOCATE WIRE. TAGS ARE NOT REQUIRED ON VALVES INSTALLED ON FIRE HYDRANT BRANCH LINES.
7. IN LIEU OF PRECAST CONCRETE PAD, A 6" THICK X 24" (ROUND OR SQUARE) POURED CONCRETE PAD W/2 - #4 REBAR AROUND PERIMETER, MAY BE USED.
8. GRAVEL SHALL BE PROVIDED UNDER ALL VALVES 20" AND LARGER. THE MINIMUM VERTICAL LIMIT OF GRAVEL IS 12" UNDER THE VALVE UP TO $\frac{1}{3}$ THE OVERALL HEIGHT OF THE VALVE.
9. FOR VALVES 12 INCH AND SMALLER, PROVIDE A WHITE OR BLACK PLASTIC DEBRIS SHIELD WHICH INSTALLS BELOW THE OPERATING NUT. THIS SHIELD SHALL CENTER THE RISER PIPE BOX OVER THE OPERATING NUT AND MINIMIZE INFILTRATION. SHIELD SHALL BE BY AFC, BOXLOK OR APPROVED EQUAL.
10. ALL VALVES SHALL BE INSTALLED WITH AN ELECTRIC LOCATE MARKER. MARKER SHALL BE 4" DIA. COLOR CODED BALL MARKER (SM-1403XR FOR WATER AND 1408XR FOR RECLAIMED WATER).

WATER VALVE INSTALLATION DETAIL

JANUARY 2023 PLATE W-18

TOCOL Engineering, LLC
714 NORTH ORANGE AVENUE, GREEN COVE SPRINGS, FL 32043
PH: 904-215-1388 E.B. NUMBER: 26383

ENGINEER OF RECORD
CHARLES SOHM
FLORIDA
REGISTRATION NUMBER: 79289

TYLER PLAZA WEST
FOR
TYLER PLAZA WEST, LLC

JEA UTILITY DETAILS

REVISIONS

PLOT DATE:
DRAWN BY:
DESIGNED BY:
CHECKED BY:
SCALE:
JOB NO.:

SHEET NO.
17H

Date: 11/8/23 Time: 5:42 PM DWG Name: \\TE-GCS\01-Projects\21-470 Tyler West Plaza 2021\03-CADD\05_21-470 JEA UTILITY DETAILS.dwg Layout: 17H

PVC PIPE RESTRAINT NOTES:

1. THIS SCHEDULE SHALL BE UTILIZED ON ALL WATER, SEWER FORCE MAIN OR RECLAIMED WATER SYSTEMS. ALL FITTINGS SHALL BE RESTRAINED TO LENGTHS INDICATED ON THE ABOVE SCHEDULE, AT A MINIMUM.
2. ASSUMPTIONS: PVC PIPE, SAFETY FACTOR=1.5, TEST PRESSURE=150PSI, SOIL=GM OR SM, TRENCH TYPE 3, DEPTH OF COVER=30 INCHES FOR 20" AND SMALLER PIPE SIZE OR 36 INCHES FOR 24" AND LARGER PIPE SIZE.
3. BENDS AND VALVES: SHALL BE RESTRAINED ON EACH SIDE OF FITTING.
4. VERTICAL OFFSETS: ARE APPROX. 3 FEET COVER ON TOP AND APPROX. 8 FEET COVER ON BOTTOM. PER THE DETAILS, Lu IS THE RESTRAINED LENGTH FOR THE UPPER (TOP) LEVEL. Li IS THE RESTRAINED LENGTH FOR THE LOWER (DEEPER) LEVEL. ASSUME 45 DEGREE BENDS.
5. TEES: TOTAL LENGTH BETWEEN FIRST JOINTS OR RESTRAINED LENGTH ON EITHER SIDE OF TEE (RUN) SHALL BE A TOTAL DISTANCE OF 30 FEET (MIN). SEE SCHEDULE ABOVE FOR RESTRAINT LENGTH ON TEE "BRANCH" LINE.
6. HDPE TO PVC TRANSITIONS: THE PVC PIPE SIDE SHALL BE RESTRAINED 35 FT (MIN).
7. THE INSTALLATION OF BELL HARNESS RESTRAINTS AT PVC JOINTS (DR-18 & 25 PIPE) SHALL BE COMPLETED PER THE MANUFACTURERS RECOMMENDATION, WHICH INCLUDES NOT OVER TIGHTENING THE PARALLEL RODS/NUTS. THESE NUTS SHOULD ONLY BE SNUG TIGHT. THE HOME MARKS ON THE PIPE SHOULD ALWAYS BE VISIBLE AFTER THE RESTRAINT IS INSTALLED. OVERHOMING THE JOINT MAY CAUSE A FAILURE AT THE BELL RESULTING IN A SERVICE OUTAGE.

LENGTH (L) TO BE RESTRAINED (SEE PLATE Nos. 38C & 38D FOR ADDITIONAL DETAILS)

NOMINAL PIPE SIZE (IN.)	HORIZONTAL BENDS 90° BENDS L (FT.)	45° BENDS L (FT.)	22.5° BENDS L (FT.)	11.25° BENDS L (FT.)	VERTICAL OFFSETS 45° BENDS (SEE NOTE 4) UPPER L (FT.)	LOWER L (FT.)	VALVES OR DEAD ENDS L (FT.)
4	21	9	5	3	17	3	47
6	30	13	6	3	23	4	66
8	38	16	8	4	30	6	86
10	45	19	9	5	36	7	103
12	53	22	11	6	43	8	121
14	61	26	13	6	50	9	140
16	66	28	14	7	55	10	154
18	73	30	15	8	60	11	170
20	79	33	16	8	66	12	186
24	79	33	16	8	77	15	185
30	93	39	19	10	97	17	222
36	106	39	21	11	107	20	257
42	117	49	24	12	120	24	289
48	144	53	26	13	133	26	321

REDUCERS SIZE (IN.)	L (FT.)
6x4	34
8x6	36
8x4	62
10x8	35
10x6	63
12x10	36
12x8	64
16x12	66
16x10	92
20x18	35
20x16	66
20x12	117
24x20	56
24x18	80
24x16	101
30x24	78
30x20	121
36x30	78
36x24	141
42x36	75
42x30	140
48x42	75
48x36	139

TEES SEE NOTE 5 RUN SIZE (IN.)	BRANCH SIZE (IN.)	L (FT.)
4	4	F.O.
4	6 4 < LESS	10 F.O.
8	8 6 < LESS	29 F.O.
10	10 8 6 < LESS	45 13 F.O.
12	12 10 8 < LESS	62 32 F.O.
16	16 12 10 10 < LESS	94 39 5 F.O.
20	20 16 12 10 < LESS	125 76 14 F.O.
24	24 20 16 12 < LESS	124 84 36 F.O.
30	30 24 20 16 16 < LESS	159 104 60 5 F.O.
36	36 30 24 20 16 < LESS	192 142 83 33 F.O.
42	42 36 30 24 20 16 < LESS	223 178 124 59 5 F.O.
48	48 42 36 30 24 20 < LESS	253 209 162 104 34 F.O.

F.O. = FITTING ONLY

PVC PIPE RESTRAINT JOINT SCHEDULE

JANUARY 2023 PLATE W-31A

DUCTILE IRON PIPE RESTRAINT JOINT NOTES:

1. THIS SCHEDULE SHALL BE UTILIZED ON ALL WATER, SEWER FORCE MAIN OR RECLAIMED WATER SYSTEMS. ALL FITTINGS SHALL BE RESTRAINED TO LENGTHS INDICATED ON THE ABOVE SCHEDULE, AT A MINIMUM.
2. ASSUMPTIONS: DUCTILE IRON PIPE (WITHOUT POLY WRAP), SAFETY FACTOR=1.5, TEST PRESSURE=150PSI, SOIL=GM OR SM, TRENCH TYPE 3, DEPTH OF COVER=30 INCHES FOR 20" AND SMALLER PIPE SIZE OR 36 INCHES FOR 24" AND LARGER PIPE SIZE. FOR D.I.P. W/POLY WRAP, USE RESTRAINT JOINT SCHEDULE FOR PVC PIPE.
3. BENDS AND VALVES: SHALL BE RESTRAINED ON EACH SIDE OF FITTING.
4. VERTICAL OFFSETS: ARE APPROX. 3 FEET COVER ON TOP AND APPROX. 8 FEET COVER ON BOTTOM. PER THE DETAILS, Lu IS THE RESTRAINED LENGTH FOR THE UPPER (TOP) LEVEL. Li IS THE RESTRAINED LENGTH FOR THE LOWER (DEEPER) LEVEL. ASSUME 45 DEGREE BENDS.
5. TEES: TOTAL LENGTH BETWEEN FIRST JOINTS OR RESTRAINED LENGTH ON EITHER SIDE OF TEE (RUN) SHALL BE A TOTAL DISTANCE OF 30 FEET (MIN). SEE SCHEDULE ABOVE FOR RESTRAINT LENGTH ON TEE "BRANCH" LINE.
6. HDPE TO D.I.P. TRANSITIONS: THE D.I.P. PIPE SIDE SHALL BE RESTRAINED 35 FT (MIN).

LENGTH (L) TO BE RESTRAINED (SEE PLATE Nos. 38C & 38D FOR ADDITIONAL DETAILS)

NOMINAL PIPE SIZE (IN.)	HORIZONTAL BENDS 90° BENDS L (FT.)	45° BENDS L (FT.)	22.5° BENDS L (FT.)	11.25° BENDS L (FT.)	VERTICAL OFFSETS 45° BENDS (SEE NOTE 4) UPPER L (FT.)	LOWER L (FT.)	VALVES OR DEAD ENDS L (FT.)
4	17	7	4	2	11	3	30
6	24	15	5	3	15	4	42
8	31	13	6	3	20	5	55
10	36	15	8	4	23	6	65
12	42	18	9	5	27	7	77
14	48	20	10	5	31	7	87
16	53	22	11	6	35	8	97
18	58	24	12	6	39	9	107
20	63	27	13	6	42	10	118
24	63	27	13	7	49	12	118
30	75	31	15	8	59	14	141
36	86	36	17	9	68	17	163
42	95	40	19	10	76	19	183
48	117	43	21	11	84	21	203

REDUCERS SIZE (IN.)	L (FT.)
6x4	22
8x6	23
8x4	39
10x8	22
10x6	40
12x10	23
12x8	41
16x12	42
16x10	58
20x18	22
20x16	42
20x12	74
24x20	36
24x18	51
24x16	64
30x24	50
30x20	77
36x30	50
36x24	89
42x36	48
42x30	89
48x42	48
48x36	88

TEE SEE NOTE 5 RUN SIZE (IN.)	BRANCH SIZE (IN.)	L (FT.)
4	4	F.O.
4	6 4 < LESS	6 F.O.
8	8 6 < LESS	19 F.O.
10	10 8 6 < LESS	29 9 F.O.
12	12 10 8 < LESS	40 21 F.O.
16	16 12 10 8 < LESS	60 25 3 F.O.
20	20 16 12 10 < LESS	79 48 9 F.O.
24	24 20 16 12 < LESS	79 54 23 F.O.
30	30 24 20 16 12 < LESS	101 66 38 4 F.O.
36	36 30 24 20 16 12 < LESS	122 90 53 21 1 F.O.
42	42 36 30 24 20 16 12 < LESS	141 113 79 38 3 1 F.O.
48	48 42 36 30 24 20 < LESS	160 133 103 66 22 F.O.

F.O. = FITTING ONLY

DUCTILE IRON PIPE RESTRAINT JOINT SCHEDULE

JANUARY 2023 PLATE W -31B

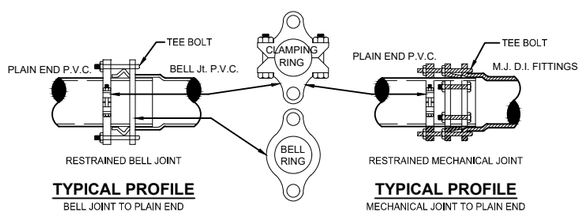

TYPICAL PROFILE
BELL JOINT TO PLAIN END W/MECHANICAL RESTRAINERS

SECTION

TYPICAL PROFILE
MECHANICAL JOINT TO PLAIN END W/MECHANICAL RESTRAINERS

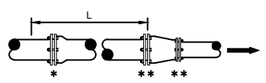

REDUCER

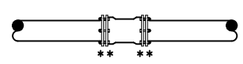

MECHANICAL JOINT SLEEVES

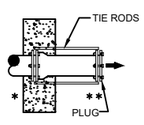

NO. OF TIE RODS REQUIRED

3" - 8"	DIAMETER MAIN - 2 TIE RODS REQUIRED PER JOINT (3/4" ROD)
10" - 12"	DIAMETER MAIN - 4 TIE RODS REQUIRED PER JOINT (3/4" ROD)
14" - 16"	DIAMETER MAIN - 6 TIE RODS REQUIRED PER JOINT (3/4" ROD)
18" - 20"	DIAMETER MAIN - 8 TIE RODS REQUIRED PER JOINT (3/4" ROD)
24"	DIAMETER MAIN - 12 TIE RODS REQUIRED PER JOINT (3/4" ROD)
30" - 36"	DIAMETER MAIN - 14 TIE RODS REQUIRED PER JOINT (1" ROD)
42" - 48"	DIAMETER MAIN - 16 TIE RODS REQUIRED PER JOINT (1 1/4" ROD)
54"	DIAMETER MAIN - 18 TIE RODS REQUIRED PER JOINT (1 1/4" ROD)

DEAD - END THRUST COLLAR ANCHOR

TO BE USED INSTEAD OF TOTAL RESTRAINED LENGTH (OPTIONAL) SIZE AS PER THRUST BLOCK DETAIL (W-38). SEE DETAILS W-36 & W-37.

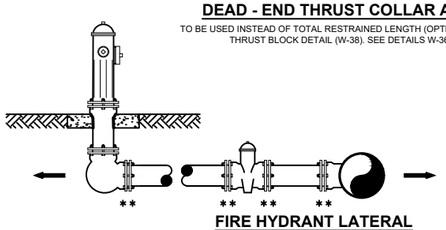

FIRE HYDRANT LATERAL

GENERAL NOTE:

1. PAY ITEM " * " DENOTES A RESTRAINT WHICH IS PAID FOR ON A PER EACH BASIS.
2. PAY ITEM " ** " DENOTES A RESTRAINT WHICH IS INCLUDED IN THE UNIT PRICE BID FOR FITTING OR VALVE.
3. ➡ INDICATES DIRECTION OF THRUST FORCE.

MECHANICAL RESTRAINT DETAILS - I

JANUARY 2023 PLATE W-31C

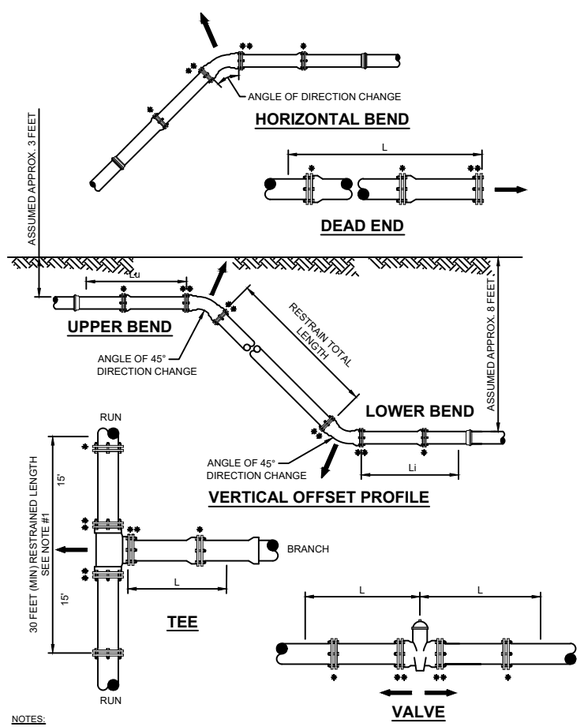

NOTES:

1. TOTAL LENGTH BETWEEN FIRST JOINTS OR RESTRAINED LENGTH ON EITHER SIDE OF TEE (RUN) SHALL BE A TOTAL DISTANCE OF 30 FEET (MIN.).
2. PAY ITEM "*" DENOTES A RESTRAINT WHICH IS PAID FOR ON A PER EACH BASIC.
3. PAY ITEM "**" DENOTES A RESTRAINT WHICH IS INCLUDED IN THE UNIT PRICE BID FOR FITTING OR VALVE.

MECHANICAL RESTRAINT DETAILS - II

JANUARY 2023 PLATE W-31D

TOCOL Engineering, LLC
714 NORTH ORANGE AVENUE, GREEN COVE SPRINGS, FL 32043
PH: 904-215-1388 E.B. NUMBER: 26383

ENGINEER OF RECORD
CHARLES SOHM
FLORIDA
REGISTRATION NUMBER: 79289

TYLER PLAZA WEST
FOR
TYLER PLAZA WEST, LLC

JEA UTILITY DETAILS

REVISIONS

PLOT DATE:
DRAWN BY:
DESIGNED BY:
CHECKED BY:
SCALE:
JOB NO.:

SHEET NO.
17I

Date: 11/8/23 Time: 5:43 PM DWG Name: \\TE-GCS\01-Projects\21-470 Tyler West Plaza 2021\03-CADD\05_21-470 JEA UTILITY DETAILS.dwg Layout: 17I

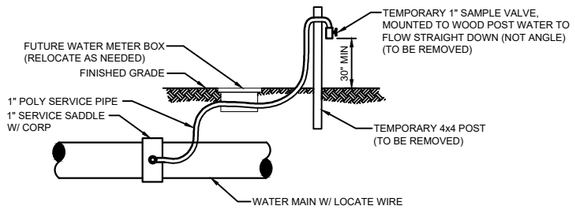

TEMPORARY SAMPLE TAP UTILIZING A NEW 1" WATER SERVICE

NOTES::

1. LOCATION OF SAMPLE POINT BIBB SHALL NOT BE WITHIN THE ROADWAY BUT ROUTED TO THE ROAD SHOULDERS.
2. THE CONTRACTOR SHALL BE RESPONSIBLE FOR THE REMOVAL OF ALL TEMPORARY PIPING & FITTINGS (AS NOTED) AFTER BACTERIOLOGICAL CLEARANCE IS RECEIVED.
3. THE CONTRACTOR SHALL UTILIZE THE ABOVE ALTERNATIVE METHODS FOR CONSTRUCTION OF TEMPORARY SAMPLE POINTS IN ALL AREAS, WHERE POSSIBLE.
4. THE CONTRACTOR SHALL COMPLY WITH ALL JEA RULES AND POLICIES AS OUTLINED BY THE JEA'S ENVIRONMENTAL RESPONSE COORDINATOR (ERC) AND OTHER ASSOCIATED JEA STANDARDS.

TEMPORARY SAMPLE TAP ALTERNATIVE METHOD A

JANUARY 2023 PLATE W-24

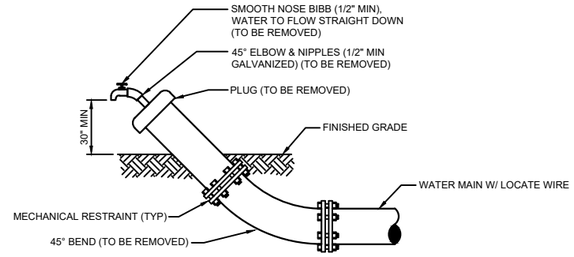

TEMPORARY SAMPLE TAP UTILIZING PLUG AT FLUSHING LOCATION

NOTES::

1. LOCATION OF SAMPLE POINT BIBB SHALL NOT BE WITHIN THE ROADWAY BUT ROUTED TO THE ROAD SHOULDERS.
2. THE CONTRACTOR SHALL BE RESPONSIBLE FOR THE REMOVAL OF ALL TEMPORARY PIPING & FITTINGS (AS NOTED) AFTER BACTERIOLOGICAL CLEARANCE IS RECEIVED.
3. THE CONTRACTOR SHALL UTILIZE THE ABOVE ALTERNATIVE METHODS FOR CONSTRUCTION OF TEMPORARY SAMPLE POINTS IN ALL AREAS, WHERE POSSIBLE.
4. THE CONTRACTOR SHALL COMPLY WITH ALL JEA RULES AND POLICIES AS OUTLINED BY THE JEA'S ENVIRONMENTAL RESPONSE COORDINATOR (ERC) AND OTHER ASSOCIATED JEA STANDARDS.

TEMPORARY SAMPLE TAP ALTERNATIVE METHOD B

JANUARY 2023 PLATE W-24A

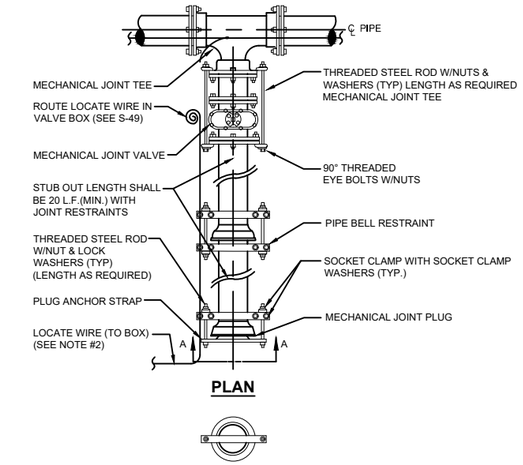

PLAN

SECTION "A-A"

NOTES:

1. IN LIEU OF BELL/ROD RESTRAINTS, MECHANICAL JOINT RESTRAINTS MAY BE USED.
2. LOCATING WIRE REQUIRED, UTILIZING A LOCATE WIRE BOX INSTALLED AT PLUG LOCATION.
3. NUMBER OF TIE RODS REQUIRED IS AS FOLLOWS:

3" - 8"	DIAMETER MAIN - 2 TIE RODS REQUIRED PER JOINT (3/4" ROD)
10" - 12"	DIAMETER MAIN - 4 TIE RODS REQUIRED PER JOINT (3/4" ROD)
14" - 16"	DIAMETER MAIN - 6 TIE RODS REQUIRED PER JOINT (3/4" ROD)
18" - 20"	DIAMETER MAIN - 8 TIE RODS REQUIRED PER JOINT (3/4" ROD)
24"	DIAMETER MAIN -12 TIE RODS REQUIRED PER JOINT (3/4" ROD)
30" - 36"	DIAMETER MAIN -14 TIE RODS REQUIRED PER JOINT (1" ROD)
42" - 48"	DIAMETER MAIN -16 TIE RODS REQUIRED PER JOINT (1 1/4" ROD)
54"	DIAMETER MAIN -18 TIE RODS REQUIRED PER JOINT (1 1/4" ROD)

4. THE LOCATION OF THE DEAD END PLUG SHALL NOT BE UNDER PAVEMENT, IF POSSIBLE. THE STUB OUT SHALL EXTEND BEYOND THE INTERSECTION AREAS OR ROAD CROSSING BY 10 FEET (MIN.) WHERE POSSIBLE.

PLUGGED DEAD END USING MECHANICAL RESTRAINTS

JANUARY 2023 PLATE W-37

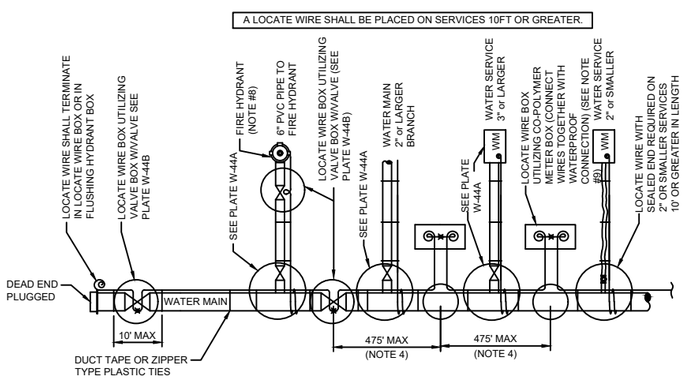

LOCATE WIRE SYSTEM

NOTES:

1. LOCATING WIRE TO BE INSTALLED IN EITHER THE ONE OR ELEVEN O'CLOCK POSITION ON ALL DUCTILE IRON OR PVC (PRESSURE MAINS). LOCATE WIRE SHALL ALSO BE INSTALLED ON ALL (HDPE) POLY MAIN PIPING (1:00 OR 11:00 POSITION, IF POSSIBLE).
2. SECURE LOCATING WIRE TO PVC & D.I.P. WATER MAIN BY USE OF DUCT TAPE OR ZIPPER TYPE PLASTIC TIE STRAPS SPACED AT A MAXIMUM DISTANCE OF TEN (10') AND AT EACH SIDE OF BELL JOINT OR FITTING.
3. THE ENTIRE LOCATING SYSTEM SHALL BE SUBJECTED TO TESTING TO DETERMINE ITS RELIABILITY. WHERE INSTALLED UNDER PAVEMENT AREAS, TESTING SHALL BE DONE PRIOR TO THE PLACEMENT OF PAVEMENT, UNLESS APPROVED OTHERWISE BY JEA.
4. LOCATING WIRE SHALL TERMINATE WITHIN AN ACTIVE VALVE BOX (WITH A VALVE) OR A METER BOX (IF NO VALVE) AT 475' INTERVALS. SEE DETAIL PLATE W-44B. WIRE CONNECTIONS BELOW GROUND (OUTSIDE OF A BOX) SHALL BE AVOIDED.
5. REFER TO SECTION 350 FOR LOCATE WIRE SPECIFICATIONS.
6. "✖" INDICATES THAT THE WIRES ARE CONNECTED TOGETHER WITH A WATERPROOF CONNECTION. (SEE DETAIL W-44B)
7. "◎" INDICATES A WIRE PIG-TAIL (4' LONG)
8. FOR FIRE HYDRANT LOCATE WIRE REQUIREMENTS AND EXCLUSIONS, SEE PLATES W-12,13 AND 14.
9. AN "LW" CUT SHALL BE CARVED IN THE CONCRETE CURB AND PAINTED AT ALL LOCATE WIRE BOXES.
10. FOUR LANES OF TRAFFIC (HAVING TWO LANES OF TRAFFIC IN EACH DIRECTION) OR GREATER THE LOCATE WIRE AND VALVE BOX SHALL BE OFF-SET TO THE RIGHT-OF-WAY.

LOCATE WIRE CONSTRUCTION FOR WATER MAINS

JANUARY 2023 PLATE W-44

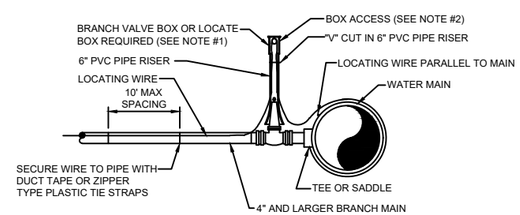

BRANCH FORCE MAIN

(2" AND LARGER WATER MAIN OR 3" AND LARGER WATER SERVICE PIPE)

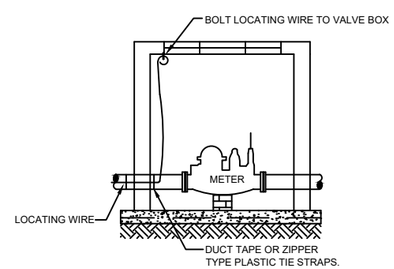

CONNECTION AT LARGE METER BOX

(3" OR LARGER SERVICE)

NOTES:

1. NOTE THAT THE BRANCH WIRE IS NOT CONNECTED TO THE MAIN WIRE.
2. LOCATE WIRE SHALL ENTER THE VALVE BOX THROUGH A "V" CUT IN THE 6" PVC RISER PIPE SECTION (SEE W-18).
3. LOCATE WIRE SHALL HAVE ENOUGH SLACK TO REACH 4' ABOVE FINAL GRADE AND LOCATE POINTS.

LOCATE WIRE FOR BRANCH MAIN

JANUARY 2023 PLATE W-44A

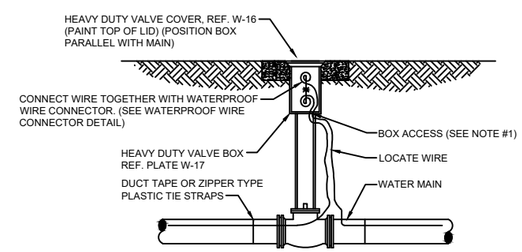

LOCATE WIRE BOX UTILIZING VALVE BOX

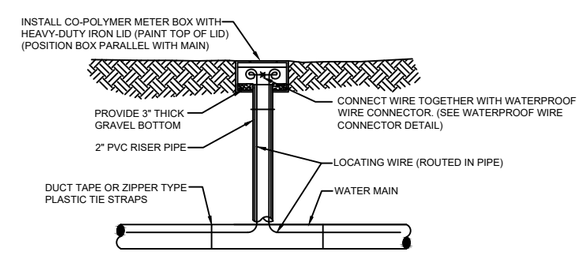

LOCATE WIRE BOX UTILIZING METER BOX

LOCATE WIRE BOX

JANUARY 2023 PLATE W-44B

TOCOL Engineering, LLC
714 NORTH ORANGE AVENUE, GREEN COVE SPRINGS, FL 32043
PH: 904-215-1388 E.B. NUMBER: 26383

ENGINEER OF RECORD
CHARLES SOHM
FLORIDA
REGISTRATION NUMBER: 79289

TYLER PLAZA WEST
FOR
TYLER PLAZA WEST, LLC

JEA UTILITY DETAILS

REVISIONS

PLOT DATE:
DRAWN BY:
DESIGNED BY:
CHECKED BY:
SCALE:
JOB NO.:

SHEET NO.
17J

Date: 11/8/23 Time: 5:43 PM DWG Name: \\TE-GCS\01-Projects\21-470 Tyler West Plaza 2021\03-CADD\05_21-470 JEA UTILITY DETAILS.dwg Layout: 17J

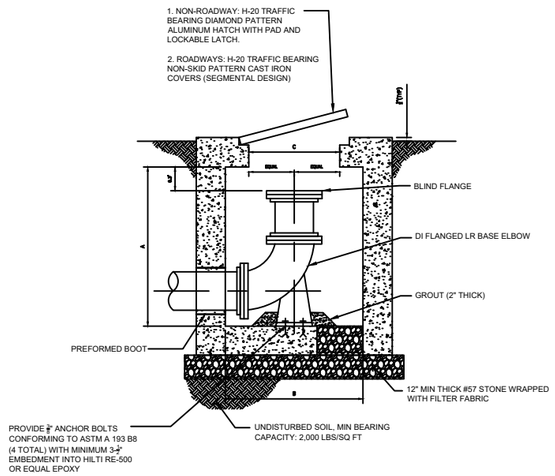

SWABBING PORT AND CLEAN OUT VAULT DETAIL - SECTION

JANUARY 2023 PLATE W-45

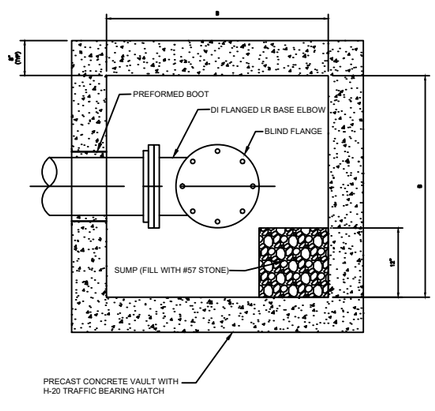

SWABBING PORT AND CLEAN OUT VAULT DETAIL - - PLAN

JANUARY 2023 PLATE W-45A

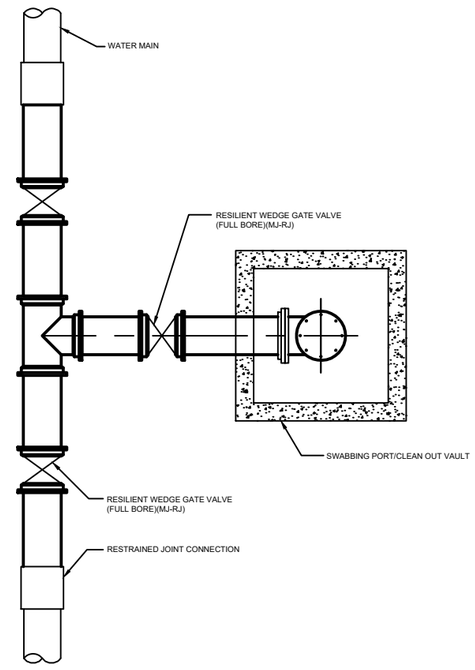

SWABBING LAUNCHING STATION DETAIL FOR NEW WATER MAIN UP TO 24"

JANUARY 2023 PLATE W-45B

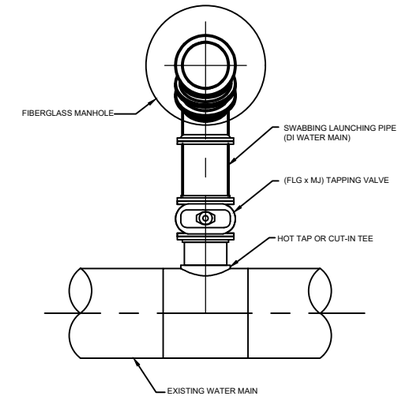

NOTES:

1. FOR HOT TAP CONNECTIONS ON EXISTING WATER MAINS 10" DIAMETER AND GREATER, DIAMETER OF TAPPING VALVE AND PIG LAUNCHING PIPE SHALL BE ONE NOMINAL SIZE LESS THAN EXISTING WATER MAIN.

SWABBING PIG LAUNCHING STATION DETAIL FOR WATER MAINS UP TO 24" - PLAN

JANUARY 2023 PLATE W-45C

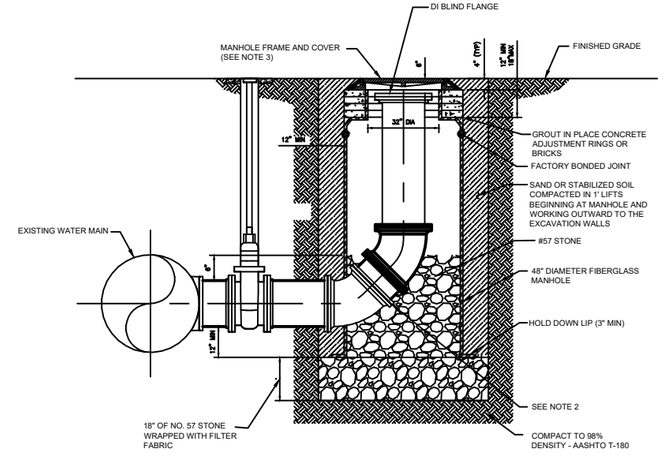

NOTES:

1. PROVIDE ALL MATERIALS IN ACCORDANCE TO JEA WATER AND WASTEWATER STANDARD SPECIFICATIONS.
2. USE TWO VERTICAL 45 DEGREE MJ BENDS OR LONG RADIUS 90 DEGREE MJ BEND.
3. PROVIDE STANDARD JEA FRAME AND COVER.
4. RESTRAIN ALL JOINTS.

RETROFIT SWABBING LAUNCHING STATION DETAIL FOR WATER MAINS UP TO 24" - SECTION

JANUARY 2023 PLATE W-45D

TOCOL Engineering, LLC
714 NORTH ORANGE AVENUE, GREEN COVE SPRINGS, FL 32043
PH: 904-215-1388 E.B. NUMBER: 26383

ENGINEER OF RECORD
CHARLES SOHM
FLORIDA REGISTRATION NUMBER: 79289

TYLER PLAZA WEST
FOR
TYLER PLAZA WEST, LLC

JEA UTILITY DETAILS

REVISIONS

PLOT DATE:
DRAWN BY:
DESIGNED BY:
CHECKED BY:
SCALE:
JOB NO.:

SHEET NO.
17K

Date: 11/8/23 Time: 5:44 PM DWG Name: \\TE-GCS\01-Projects\21-470 Tyler West Plaza 2021\03-CADD\05_21-470 JEA UTILITY DETAILS.dwg Layout: 17K

PLAN VIEW

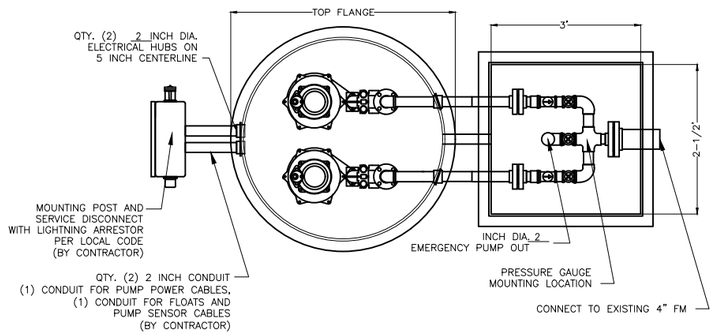

SECTION VIEW

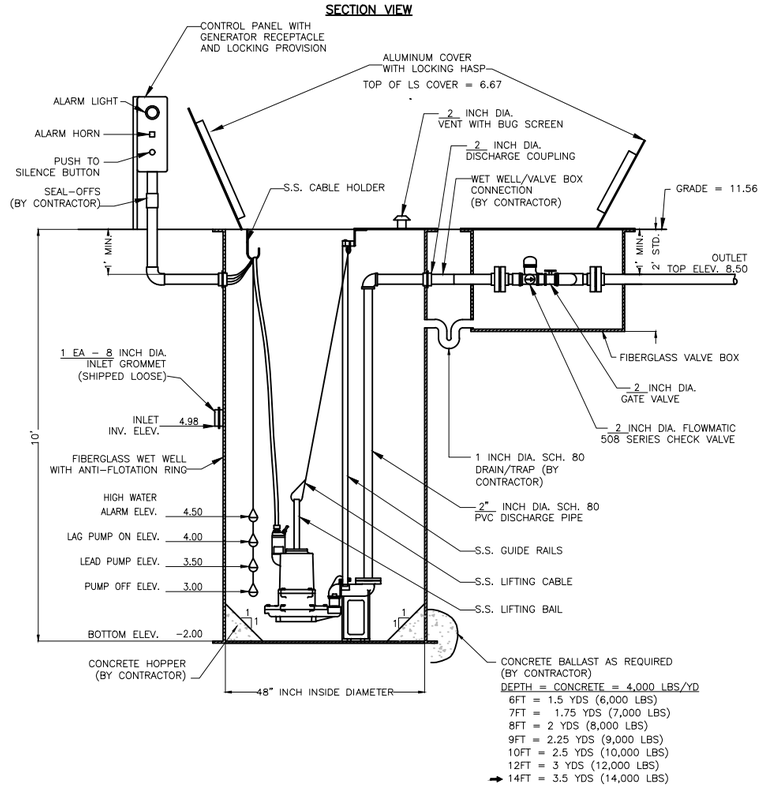

FDEP REQUIRMENTS

PROVIDE CONCRETE HOPPER WITH 1:1 SLOPE.
PROVIDE 3/4" WATER LINE WITH A 3/4" RPZ.
ALL ELECTRICAL PANELS SHALL BE ABOVE THE 100 YEAR FLOOD ELEVATION.

GENERAL NOTES

DESIGN CONDITIONS

MODEL	XYLEM NP3127SH3	11	HP
GPM	80	20 – 90	FT/TDH
VOLTAGE	240/480	THREE	PHASE
DISCHARGE	2"	3127	IMPELLER

PUMPS SHALL BE OF THE SUBMERSIBLE TYPE. EACH PUMP SHALL BE MOUNTED ON A Ø2" RAIL SYSTEM. THE RAIL SYSTEM SHALL BE SELF ENGAGING RESULTING IN A LEAKPROOF COUPLING. THE RAIL SYSTEM SHALL INCLUDE THE BASE ELBOW, DISCHARGE FLANGE ASSEMBLY, Ø1" 304SS GUIDE RAILS, 316SS UPPER GUIDE BRACKET, 316SS LIFTING BAIL AND CABLE, AND A SIX-HOOK 316SS CABLE HOLDER. THE RAIL SYSTEM SHALL BE MOUNTED AND PRE-PIPED BY THE PUMP SUPPLIER.

PUMP CONSTRUCTION
THE PUMP VOLUTE, MOTOR AND SEAL HOUSING SHALL BE CONSTRUCTED OF CAST IRON, ASTM A-48. ALL EXTERNAL FASTENERS SHALL BE SERIES 300 STAINLESS STEEL. THE PUMP SHAFT SHALL BE CONSTRUCTED OF SERIES 416 STAINLESS STEEL.

IMPELLER
THE IMPELLER SHALL BE OF MULTI-VANE, SEMI-OPEN BRONZE CONSTRUCTION. THE IMPELLER SHALL INCLUDE PUMP-OUT VANES ON THE BACK OF THE IMPELLER AND SHALL BE STATICALLY AND HYDRAULICALLY BALANCED.

CUTTERS
A TWO-STAGE CUTTER ASSEMBLY SHALL BE MOUNTED ON THE SUCTION SIDE OF THE PUMP WITH DIRECT DISCHARGE INTO THE PUMP IMPELLER. THE GRINDER SHALL BE CAPABLE OF GRINDING ALL MATERIALS FOUND IN NORMAL, DOMESTIC SEWAGE, INCLUDING PLASTICS, RUBBER, SANITARY NAPKINS, DISPOSABLE DIAPERS AND WOOD PARTICLES, INTO A FINE SLURRY. BOTH THE STATIONARY AND ROTATING CUTTERS SHALL BE CONSTRUCTED OF HARDENED 440C STAINLESS STEEL.

MOTOR
THE MOTOR SHALL BE MOUNTED IN A SEALED, SUBMERSIBLE TYPE HOUSING. THE STATOR SHALL BE SECURELY HELD IN PLACE WITH A REMOVABLE END RING AND THREADED FASTENERS FOR EASE OF REMOVAL WITHOUT THE USE OF HEAT OR A PRESS. THE MOTOR WILL HAVE TWO HEAVY-DUTY BALL BEARINGS; ONE UPPER (RADIAL) AND ONE LOWER (THRUST), TO SUPPORT THE SHAFT. THE MOTOR SHALL BE EQUIPPED WITH A WINDING THERMOSTAT THAT AUTOMATICALLY SHUTS THE MOTOR OFF IN CASE OF MOTOR OVERHEATING.

SEAL CHAMBER
THE PUMP SHALL HAVE TWO MECHANICAL SEALS, MOUNTED IN TANDEM WITH AN OIL CHAMBER BETWEEN THE SEALS. THE PUMP SHALL BE EQUIPPED WITH A SEAL LEAK DETECTION PROBE AND WARNING SYSTEM BY USING A SEAL FAILURE SENSOR INSTALLED IN THE SEAL CHAMBER.

WET WELL
THE PUMP SUPPLIER SHALL PROVIDE THE FIBERGLASS WET WELL. THIS GLASS FIBER-REINFORCED POLYESTER BASIN SHALL BE CONSTRUCTED OF A COMMERCIAL GRADE OF GLASS FIBER AND SHALL BE PROVIDED WITH AN ANTI-FLOTATION RING WITH A MINIMUM DIAMETER OF THREE INCHES LARGER THAN THE BASIN DIAMETER. THE RAIL SYSTEM, INTERNAL PIPING AND DISCHARGE CONNECTIONS SHALL BE PRE-INSTALLED BY THE PUMP SUPPLIER.

HATCH COVER
THE HATCH COVER SHALL BE 2/3 HINGED TO ALLOW FOR MAXIMUM ACCESS TO THE WET WELL. THE HATCH COVER SHALL BE ALUMINUM WITH STAINLESS STEEL FASTENERS, RATED FOR 150 PSF OR GREATER. THE HATCH COVER SHALL INCLUDE A SINGLE OR DUAL DOOR OF DIMENSIONS SPECIFIED BY THE PUMP MANUFACTURER FOR PROPER PUMP CLEARANCE. THE COVER SHALL BE MANUFACTURED BY US FABRICATION, OR EQUAL.

VALVE BOX
THE VALVE BOX IS FIBERGLASS WITH ALUMINUM LOCKABLE COVER. STANDARD SIZE VALVE BOX IS 3' X 2 1/2' X 2'.

VALVES
VALVES SHALL BE SEWAGE SWING CHECK WITH CLEAN-OUT PORTS AND BRASS GATE VALVES.

FLOATS
FLOATS SHALL BE ANCHOR SCIENTIFIC ROTO-FLOATS OR EQUAL.

CONTROLS
THE CONTROL PANEL SHALL BE UL508 LISTED. A NEMA 3R OR 4X ENCLOSURE SHALL BE PROVIDED IN EITHER FIBERGLASS OR STAINLESS STEEL. THE PANEL SHALL INCLUDE AN ALTERNATING CONTROL SCHEME (DUPLEX AND ABOVE), MAIN CIRCUIT BREAKER, GENERATOR RECEPTACLE, HIGH LEVEL ALARM LIGHT AND HORN, ELAPSED TIME METERS, VOLTAGE OR PHASE MONITOR, SEAL FAILURE AND OVERLOAD SENSORS. THE LIGHTNING ARRESTOR SHALL BE SHIPPED LOOSE FOR FIELD INSTALLATION.

SUPPLIER
PUMP SUPPLIER SHALL PROVIDE SUBMERSIBLE PUMPS, SLIDE RAIL ASSEMBLIES, CONTROL PANEL, FLOAT SWITCHES, ALUMINUM HATCHES AND ACCESSORIES TO INSURE PROPER OPERATIONS AND WARRANTY. THE COMPLETE PACKAGE PUMPING STATION SHALL HAVE PUMP BASES, RAIL ASSEMBLIES, AND DISCHARGE PIPING ASSEMBLED BY BARNEY'S PUMPS INC. READY FOR FIELD INSTALLATION.

NOTE:
THE PUMP STATION IS TO BE BUILT WITH APPROPRIATE FEATURES TO DISCOURAGE THE ENTRY OF ANIMALS AND UNAUTHORIZED PERSONS. POSTING OF AN UNOBSTRUCTED SIGN MADE OF DURABLE WEATHER RESISTANT MATERIAL AT A LOCATION VISIBLE TO THE PUBLIC WITH A TELEPHONE NUMBER FOR A POINT OF CONTACT IN CASE OF EMERGENCY IS SPECIFIED.

UL LISTED
ENCLOSED INDUSTRIAL CONTROL PANEL

ELECTRICAL DATA

INCOMING POWER: 230 V 3 Ø
(CONTRACTOR TO VERIFY)

ENCLOSURE AND DEADFRONT LAYOUT (TYPICAL)
(OUTER DOOR REMOVED)

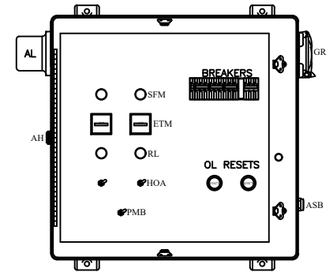

NEMA 3R OR 4X ENCLOSURE FIBERGLASS OR STAINLESS STEEL

BASE PLATE LAYOUT (TYPICAL)

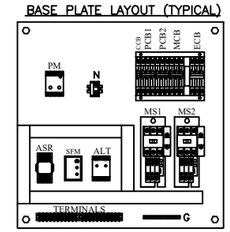

TERMINAL STRIP

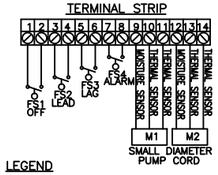

LEGEND

ENC	ENCLOSURE
MCB	MAIN CIRCUIT BREAKER
ECB	EMERGENCY CIRCUIT BREAKER
PCB1,2	PUMP CIRCUIT BREAKER
CCB	CONTROL CIRCUIT BREAKER
MS1,2	MOTOR STARTER
OL	OVERLOAD HEATER
GR	GENERATOR RECEPTACLE
VM	VOLT MONITOR
ETM	ELAPSED TIME METER
ALT	ALTERNATOR
AH	ALARM HORN
AL	ALARM LIGHT
ASB	ALARM SILENCE BUTTON
HOA	HAND OFF AUTO SWITCH
VMB	VOLT MONITOR BYPASS
RL	RUN LIGHT
IL	INDICATING LIGHT
SFM	SEAL FAIL MODULE
ASR	ALARM SILENCE RELAY
	RUN CAPACITOR
	START CAPACITOR
	START RELAY
PM	PHASE MONITOR
PMB	PHASE MONITOR BYPASS

230V THREE PHASE WIRING DIAGRAM

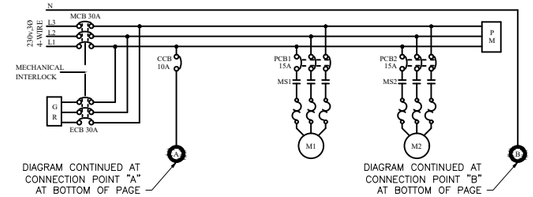

CONTINUATION OF WIRING DIAGRAMS FROM ABOVE

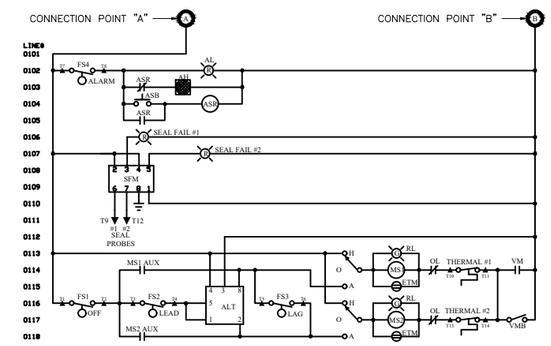

ALL PANELS SHALL CONFORM TO FLORIDA DEP 62-604.400

1) GENERATOR RECEPTACLE WITH INTERLOCK FOR EMERGENCY POWER CONNECTION.
2) SURGE AND LIGHTNING PROTECTION SHALL BE PROVIDED BY CONTRACTOR AND MOUNTED EXTERNAL TO THE CONTROL PANEL.
3) PHASE OR VOLTAGE MONITOR SHALL BE PROVIDED IN CONTROL PANEL.
4) ALL PANELS, WET WELL, VALVE BOX, AND ACCESS DOORS SHALL HAVE LOCKABLE MECHANISMS. CONTRACTOR TO PROVIDE KEYED LOCKS.
5) POST UNOBSTRUCTED SIGN MADE OF DURABLE WEATHER RESISTANT MATERIAL WITH THE FOLLOWING:
   PUBLIC NOTICE: IN CASE OF EMERGENCY CONTACT:
6) THE CONTROL PANEL SHALL BE SUITABLY INSTALLED TO PREVENT SETTLING OR TIPPING.
7) ELECTRICAL CONTRACTOR TO PROVIDE SERVICE DISCONNECT WITH LIGHTNING ARRESTOR MOUNTED PER LOCAL CODES.
8) FLOAT SWITCHES SHALL BE UL LISTED.

PANEL MANUFACTURER SHALL BE UL 508 AND UL 698A LISTED.

TOCOL Engineering, LLC
714 NORTH ORANGE AVENUE, GREEN COVE SPRINGS, FL 32043
PH: 904-215-1388 E.B. NUMBER: 26383

ENGINEER OF RECORD
CHARLES SOHM
FLORIDA
REGISTRATION NUMBER: 79289

TYLER PLAZA WEST
FOR
TYLER PLAZA WEST, LLC

PUMP STATION DETAILS

REVISIONS

PLOT DATE:
DRAWN BY:
DESIGNED BY:
CHECKED BY:
SCALE:
JOB NO.:

SHEET NO.
18

Date: 11/8/23 Time: 5:45 PM DWG Name: \\TE-GCS\01-Projects\21-470 Tyler West Plaza 2021\03-CADD\06_21-470 PUMP DETAILS.dwg Layout: 18-PUMP

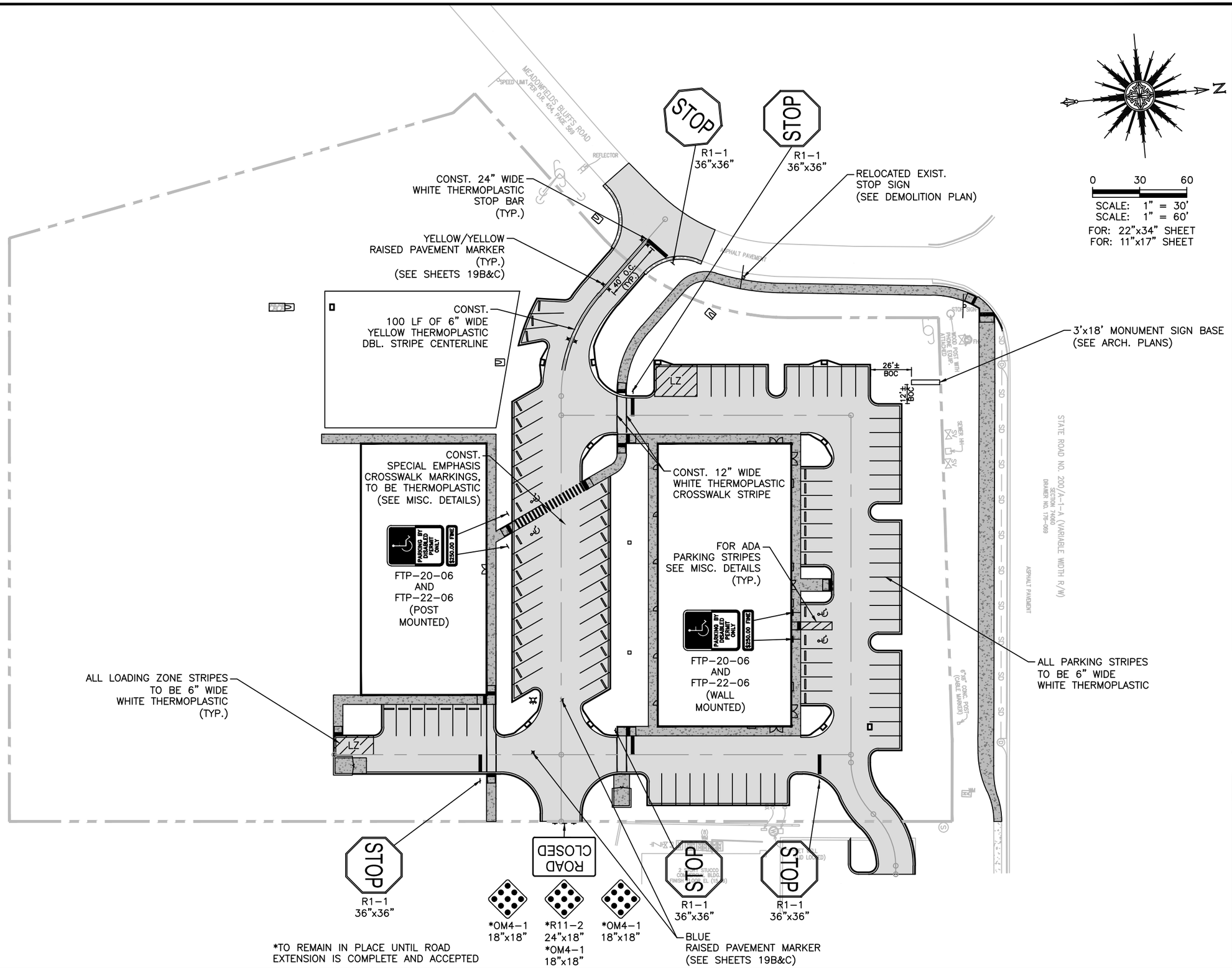

N

0 30 60

SCALE: 1" = 30'
SCALE: 1" = 60'
FOR: 22"x34" SHEET
FOR: 11"x17" SHEET

TOCOL Engineering, LLC
714 NORTH ORANGE AVENUE, GREEN COVE SPRINGS, FL 32043
PH: 904-215-1308 E.B. NUMBER: 26383

ENGINEER OF RECORD
CHARLES SOHM
FLORIDA
REGISTRATION NUMBER:
79289

TYLER PLAZA WEST
FOR
TYLER PLAZA WEST, LLC

SIGNAGE & PAVEMENT MARKING PLAN

REVISIONS

PLOT DATE:
DRAWN BY:
DESIGNED BY:
CHECKED BY:
SCALE:
JOB NO.:

SHEET NO.
19A

Date: 11/10/23 Time: 10:03 AM DWG Name: \\TE-GCS\01-Projects\21-470 Tyler West Plaza 2021\03-CADD\03_21-470 MASTER PLAN.dwg Layout: 19A-SIGN

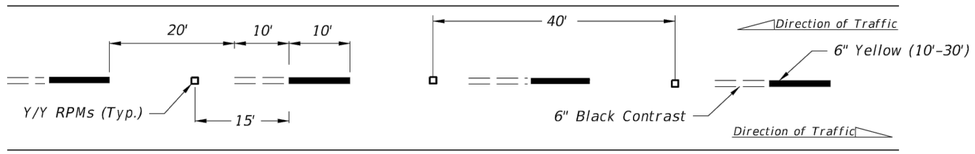

ALTERNATING SKIP LINE

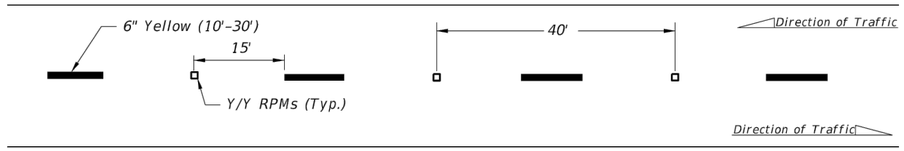

SKIP LINE

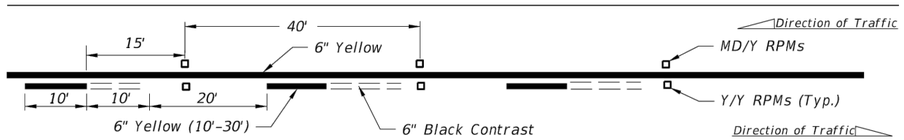

SOLID LINE WITH ALTERNATING SKIP

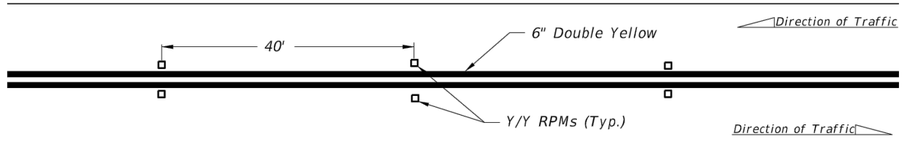

DOUBLE SOLID LINE

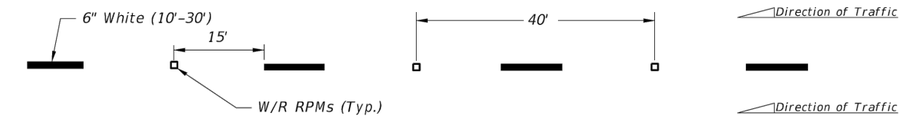

MULTILANE

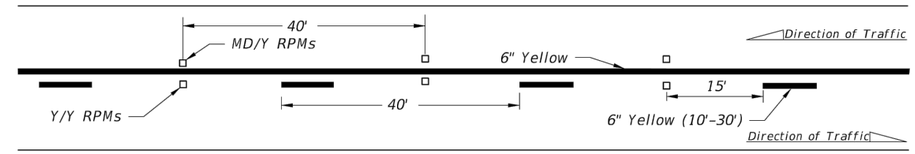

SOLID LINE WITH SKIP

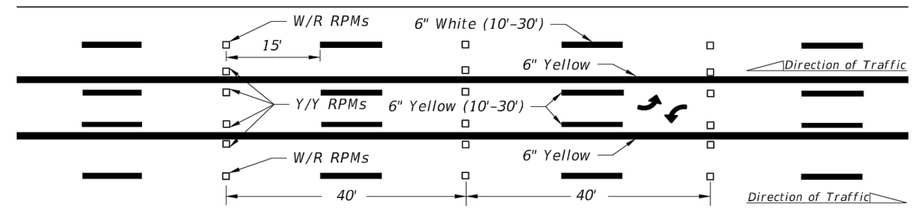

SKIP LINE WITH TWO-WAY LEFT TURN LANE

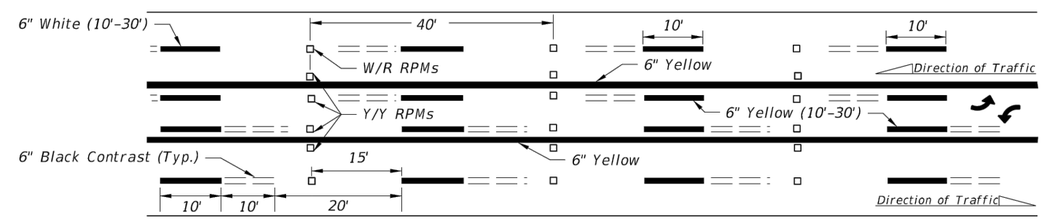

ALTERNATING SKIP LINE WITH TWO-WAY LEFT TURN LANE

NOTES:

1. Offset all RPMs 1" from solid longitudinal lines unless otherwise noted or shown.
2. Spacing may be reduced for sharp curves if required.
3. For placement of RPMs on ramps, see Index 711-003.
4. Make the traffic face of the RPM the same color as the pavement marking that it is supplementing.

LEGEND:

B/C = BACK OF CURB

EOP = EDGE OF PAVEMENT

RPM = RAISED PAVEMENT MARKER

W/R = WHITE/RED RPM

Y/Y = YELLOW/YELLOW RPM

Y/R = YELLOW/RED RPM

MD/Y = MONO-DIRECTIONAL YELLOW RPM

LAST REVISION	REVISION	DESCRIPTION:			INDEX	SHEET
11/01/18			FY 2023-24 STANDARD PLANS	TYPICAL PLACEMENT OF RAISED PAVEMENT MARKERS	706-001	1 of 6

TOCOL Engineering, LLC
714 NORTH ORANGE AVENUE, GREEN COVE SPRINGS, FL 32043
PH: 904-215-1388 E.B. NUMBER: 26383

ENGINEER OF RECORD
CHARLES SOHM
FLORIDA
REGISTRATION NUMBER: 79289

TYLER PLAZA WEST
FOR
TYLER PLAZA WEST, LLC

SIGNAGE & PAVEMENT MARKING PLAN

REVISIONS

PLOT DATE:
DRAWN BY:
DESIGNED BY:
CHECKED BY:
SCALE:
JOB NO.:

SHEET NO.
19B

Date: 11/8/23 Time: 5:50 PM DWG Name: \\TE-GCS\01-Projects\21-470 Tyler West Plaza 2021\03-CADD\03_21-470 MASTER PLAN.dwg Layout: 19B-SIGN
10/6/2022 2:40:49 PM

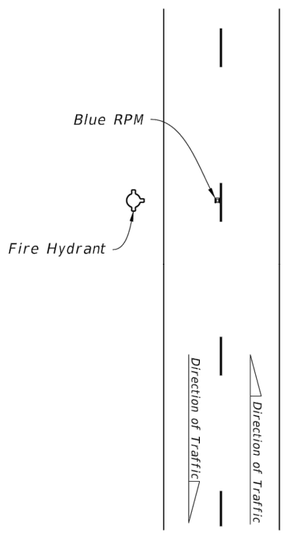

TWO-LANE ROADWAY

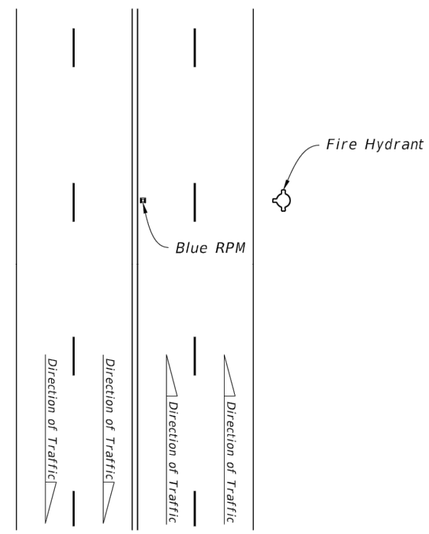

MULTILANE ROADWAY

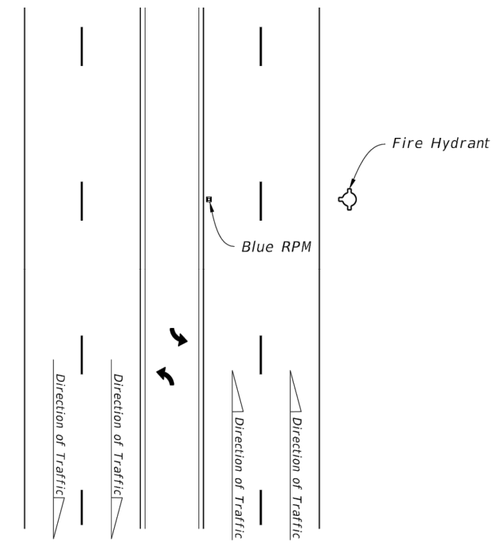

MULTILANE ROADWAY
WITH TURN LANE

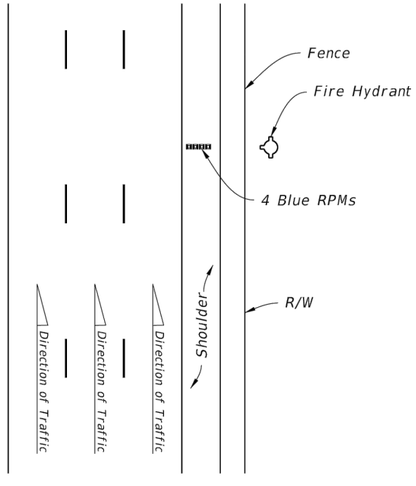

LIMITED ACCESS ROADWAY

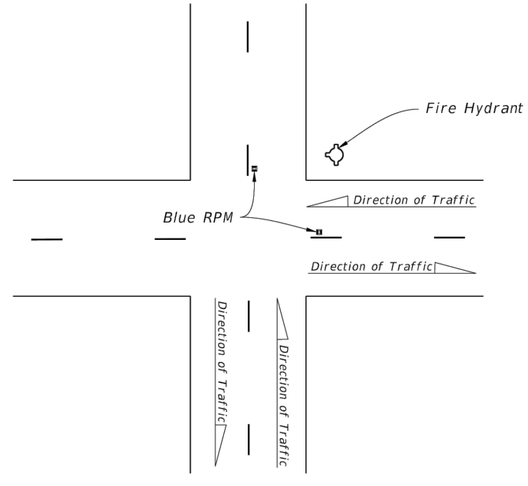

TWO-LANE ROADWAY
AT INTERSECTION

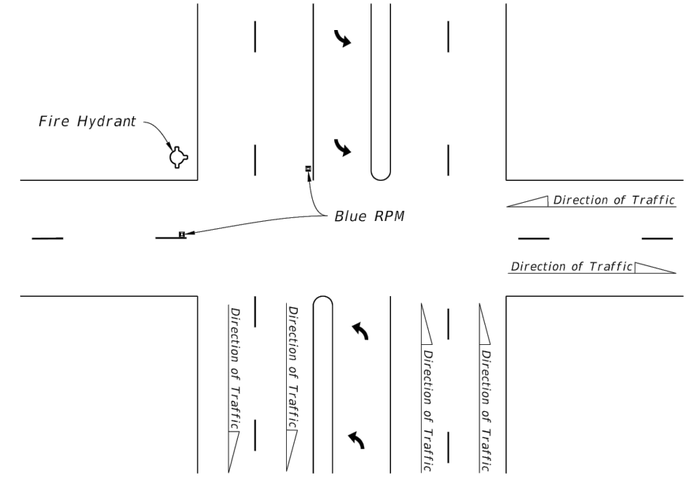

MULTILANE ROADWAY AT INTERSECTION

BLUE RPM PLACEMENT

LAST REVISION	REVISION	DESCRIPTION:				INDEX	SHEET
11/01/18			FDOT	FY 2023-24 STANDARD PLANS	TYPICAL PLACEMENT OF RAISED PAVEMENT MARKERS	706-001	6 of 6

TOCOL Engineering, LLC
714 NORTH ORANGE AVENUE, GREEN COVE SPRINGS, FL 32043
PH: 904-215-1388 E.B. NUMBER: 26383

ENGINEER OF RECORD
CHARLES SOHM
FLORIDA
REGISTRATION NUMBER: 79289

TYLER PLAZA WEST
FOR
TYLER PLAZA WEST, LLC

SIGNAGE & PAVEMENT MARKING PLAN

REVISIONS

PLOT DATE:
DRAWN BY:
DESIGNED BY:
CHECKED BY:
SCALE:
JOB NO.:

SHEET NO.
19C

Date: 11/8/23 Time: 5:51 PM DWG Name: \\TE-GCS\01-Projects\21-470 Tyler West Plaza 2021\03-CADD\03_21-470 MASTER PLAN.dwg Layout: 19C-SIGN
10/6/2022 2:40:52 PM

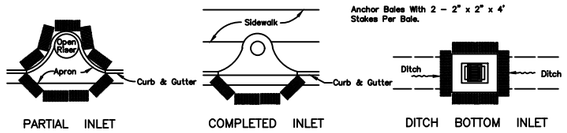

PROTECTION AROUND INLETS OR SIMILAR STRUCTURES

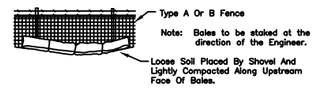

BALES BACKED BY FENCE

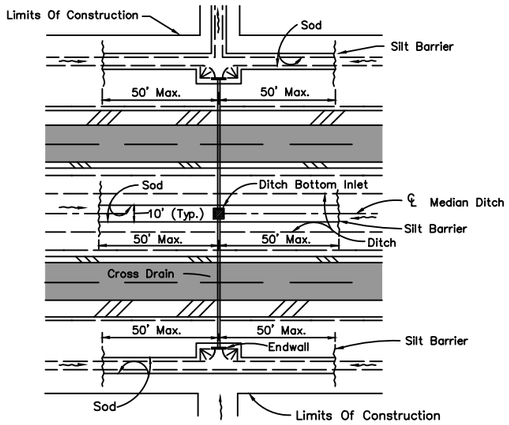

DITCH INSTALLATIONS AT DRAINAGE STRUCTURES

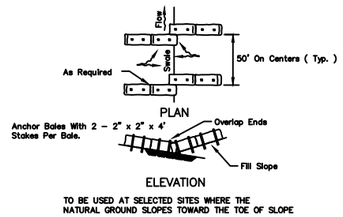

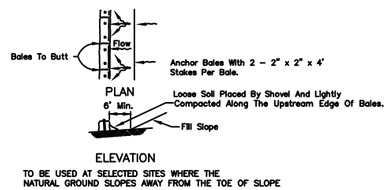

BARRIERS FOR FILL SLOPES

HAY BALE LOCATION

(D–901)
N.T.S.

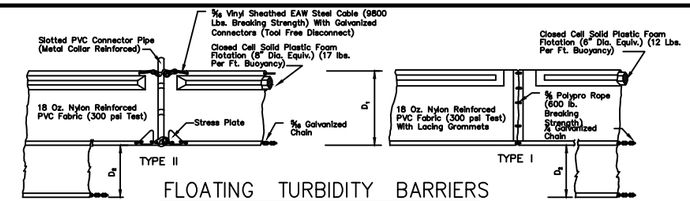

FLOATING TURBIDITY BARRIERS

NOTICE:
COMPONENTS OF TYPES I & TYPE II MAY BE SIMILAR OR IDENTICAL TO PROPRIETARY DESIGNS. ANY INFRINGEMENT ON THE PROPRIETARY RIGHTS OF THE DESIGNER SHALL BE THE SOLE RESPONSIBILITY OF THE USER. SUBSTITUTIONS FOR TYPES I AND II SHALL BE AS APPROVED BY THE ENGINEER.

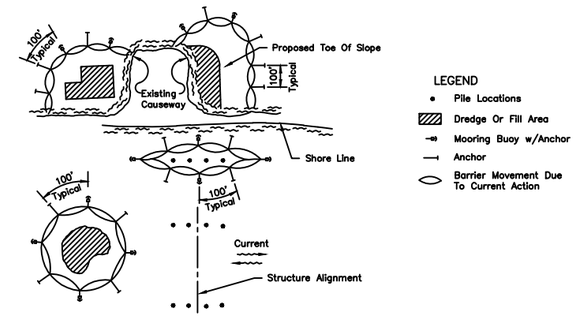

NOTES:
1. Turbidity barriers are to be used in all permanent bodies of water regardless of water depth.
2. Number and spacing of anchors dependent on current velocities.
3. Deployment of barrier around pile locations may vary to accommodate construction operations.
4. Navigation may require segmenting barrier during construction operations.
5. For additional information see Section 104 of the FDOT Standard Specifications.

TURBIDITY BARRIER APPLICATIONS

TURBIDITY BARRIERS

(D–907)
N.T.S.

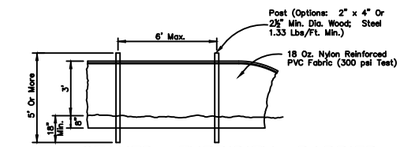

STAKED TURBIDITY BARRIER

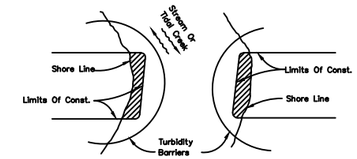

Note:
Turbidity barriers for flowing streams and tidal creeks may be either floating, or staked types or any combinations of types that will suit site conditions and meet erosion control and water quality requirements. The barrier type(s) will be at the Contractors option unless otherwise specified in the plans, however payment will be under the contract lump sum price established in the bid proposal for Erosion & Sediment Control Posts in staked turbidity barriers to be installed in vertical position unless otherwise directed by the Engineer.

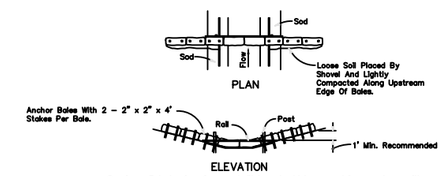

BARRIER FOR PAVED DITCH

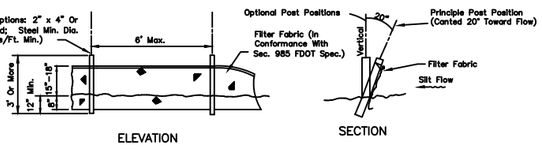

TYPE III SILT FENCE

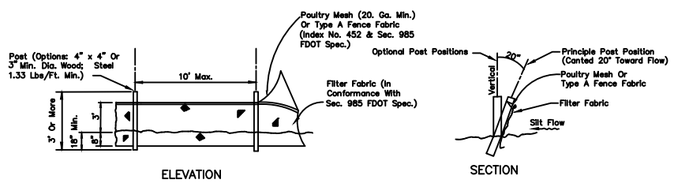

Note: Silt Fence to be paid for under the contract lump sum price for Erosion and Sediment Control.

TYPE IV SILT FENCE

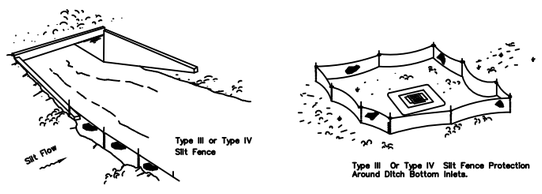

Do not deploy in a manner that silt fences will act as a dam across permanent flowing watercourses. Silt fences are to be used at upland locations and turbidity barriers used at permanent bodies of water.

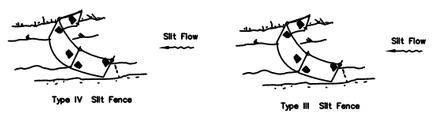

Note: Spacing for Type III & TYPE IV Fence to be in accordance with Chart 1, Sheet 1 of 3, FDOT Index No. 102 and ditch installations at drainage structures Sheet 2 of 3, FDOT Index No. 102.

SILT FENCE APPLICATIONS

SILT FENCE TYPE III & IV

(D–908)

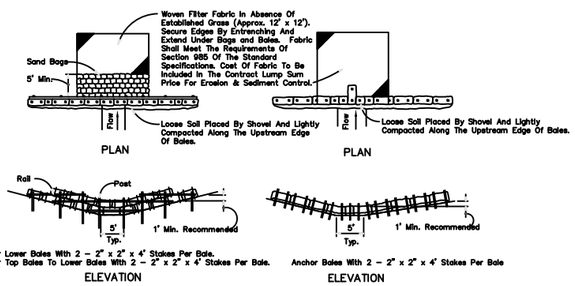

Application and Spacing: The use of Types I & II bale barriers should be limited to the conditions outlined in Chart 1, Sheet 1 of 3, Index No. 102

BARRIER FOR UNPAVED DITCHES

HAY BALE BARRIERS TYPE I & II

(D–912)
N.T.S.

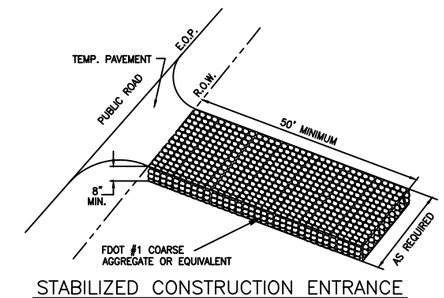

STABILIZED CONSTRUCTION ENTRANCE

N.T.S. (per FDOT Index 106)

NOTE:
WHERE FDOT SPECS AND INDEX ARE REFERENCED, PLEASE REFER TO FDOT ROADWAY & TRAFFIC DESIGN STANDARDS, AND FDOT STANDARD SPECIFICATIONS FOR ROAD & BRIDGE CONSTRUCTION.

TOCOI Engineering, LLC
714 NORTH ORANGE AVENUE, GREEN COVE SPRINGS, FL 32043
PH: 904-215-1388 E.B. NUMBER: 26353

ENGINEER OF RECORD
CHARLES SOHM
FLORIDA
REGISTRATION NUMBER: 79289

TYLER PLAZA WEST
FOR
TYLER PLAZA WEST, LLC

EROSION CONTROL DETAILS

REVISIONS

PLOT DATE:
DRAWN BY:
DESIGNED BY:
CHECKED BY:
SCALE:
JOB NO.:

SHEET NO.
20

Date: 11/8/23 Time: 5:51 PM DWG Name: \\TE-GCS\01-Projects\21-470 Tyler West Plaza 2021\03-CADD\07_21-470 EROSION CONTROL DETAILS.dwg Layout: 20

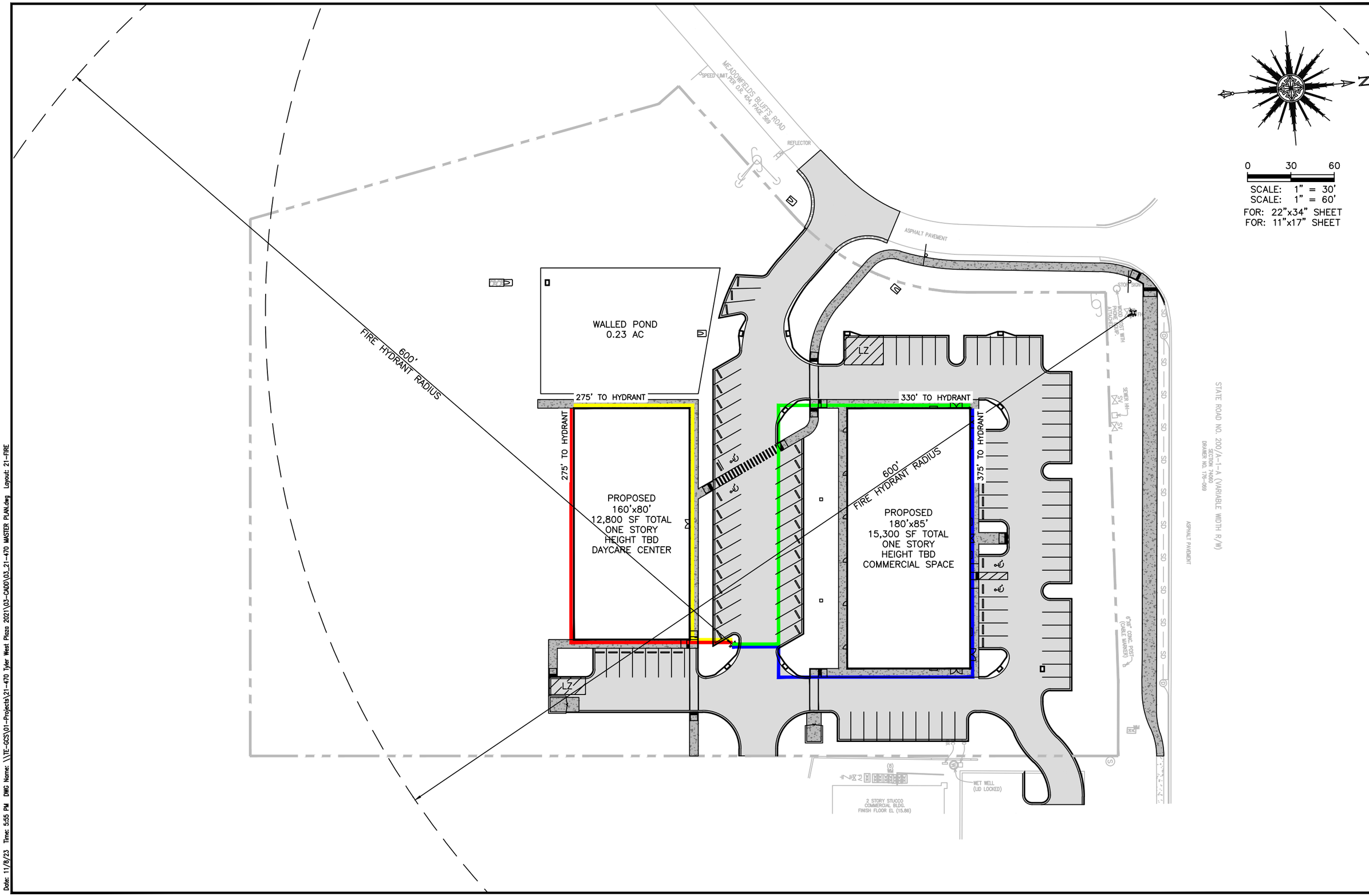

Date: 11/8/23 Time: 5:55 PM DWG Name: \\TE-GCS\01-Projects\21-470 Tyler West Plaza 2021\03-CADD\03_21-470 MASTER PLAN.dwg Layout: 21-FIRE

TOCOL Engineering, LLC
714 NORTH ORANGE AVENUE, GREEN COVE SPRINGS, FL 32043
PH: 904-215-1388 E.B. NUMBER: 26383

ENGINEER OF RECORD
CHARLES SOHM
FLORIDA
REGISTRATION NUMBER:
79289

TYLER PLAZA WEST
FOR
TYLER PLAZA WEST, LLC
FIRE SUPPRESSION PLAN

REVISIONS

PLOT DATE:
DRAWN BY:
DESIGNED BY:
CHECKED BY:
SCALE:
JOB NO.:

SHEET NO.
21

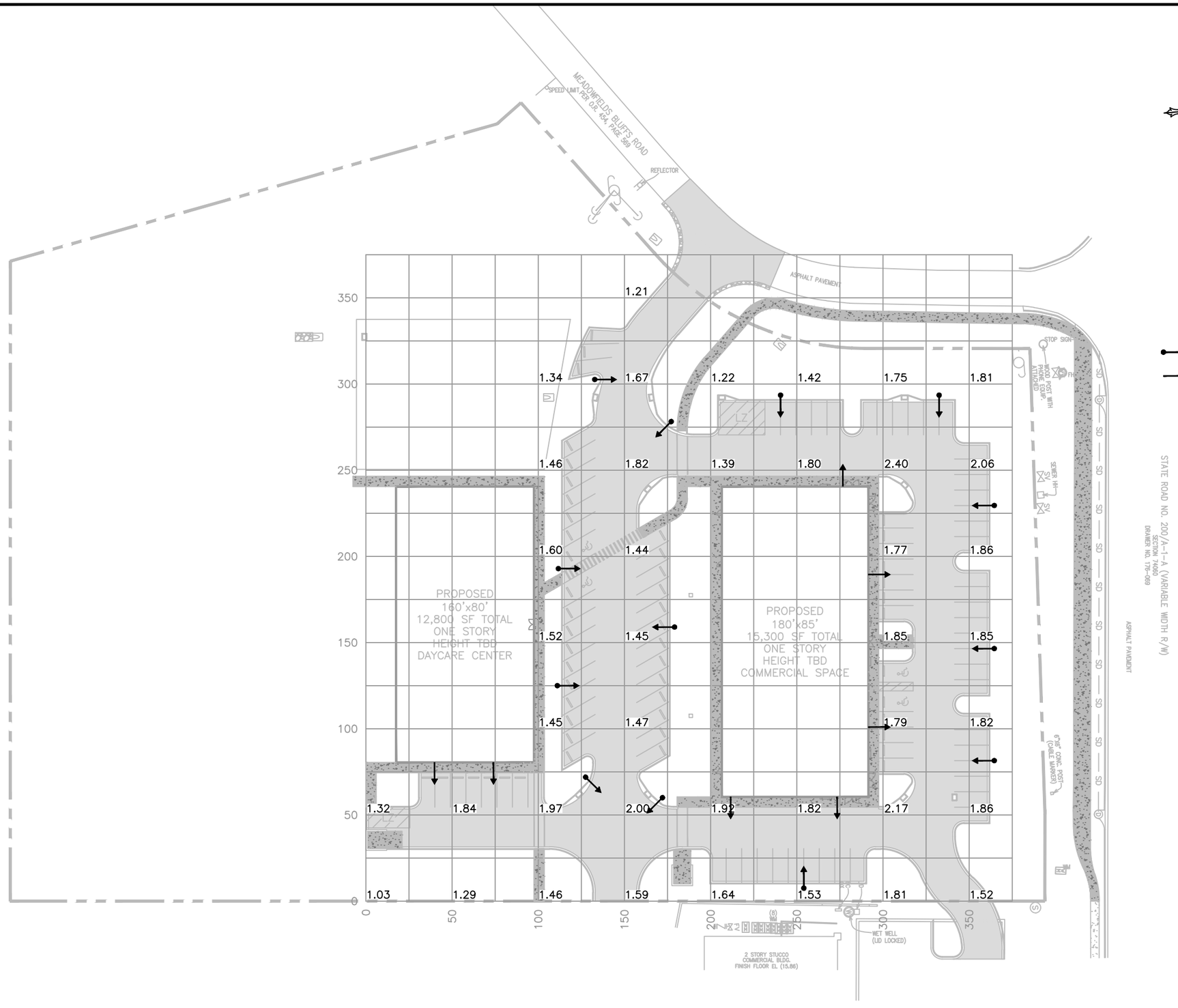

TOCOL Engineering, LLC
714 NORTH ORANGE AVENUE, GREEN COVE SPRINGS, FL 32043
PH: 904-215-1388 E.B. NUMBER: 26383

ENGINEER OF RECORD
CHARLES SOHM
FLORIDA
REGISTRATION NUMBER:
79289

TYLER PLAZA WEST
FOR
TYLER PLAZA WEST, LLC

PHOTOMETRIC PLAN

REVISIONS

PLOT DATE:
DRAWN BY:
DESIGNED BY:
CHECKED BY:
SCALE:
JOB NO.:

SHEET NO.
22

Date: 11/8/23 Time: 5:56 PM DWG Name: \\TE-GCS\01-Projects\21-470 Tyler West Plaza 2021\03-CADD\03_21-470 MASTER PLAN.dwg Layout: 22-PHOTO

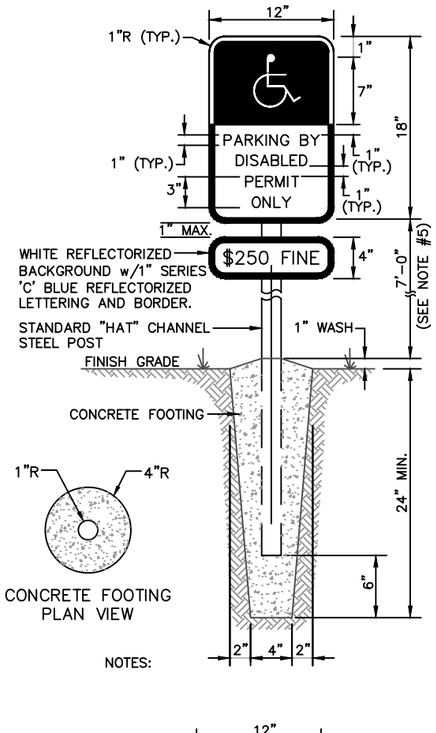

NOTES:

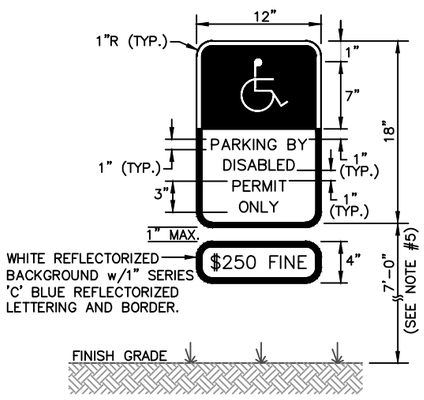

NOTES:

1. ALL LETTERS ARE 1" SERIES.
2. TOP PORTION OF SIGN SHALL HAVE A REFLECTORIZED BLUE BACKGROUND WITH WHITE REFLECTORIZED LEGEND & BORDER.
3. BOTTOM PORTION OF SIGN SHALL HAVE A REFLECTORIZED WHITE BACKGROUND WITH BLOCK OPAQUE LEGEND & BORDER
4. LETTERS AND NUMBERS ON SIGN SHALL HAVE A WIDTH-TO-HEIGHT RATIO BETWEEN 3:5 AND 1:1 AND A STROKE WIDTH-TO-HEIGHT RATIO BETWEEN 1:5 AND 1:10.
5. SIGNS SHALL NOT BE OSCURED BY A VEHICLE PARKED IN THE SPACE.
6. HANDICAPPED PARKING SPACE SIZE, STRIPING, AND SIGNAGE SHALL BE IN ACCORDANCE WITH ALL APPLICABLE CITY, STATE, & FEDERAL REGULATIONS.

ADA SIGN DETAIL

N.T.S.

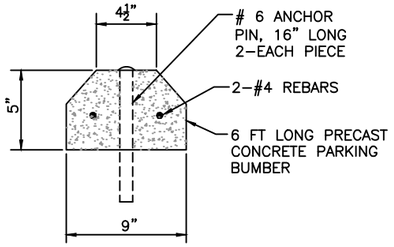

CONCRETE WHEEL STOP

N.T.S.

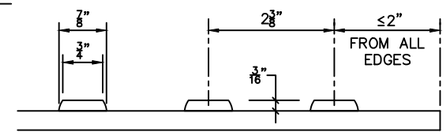

TRUNCATED DOME – DETECTABLE WARNING PAD DETAIL

N.T.S.

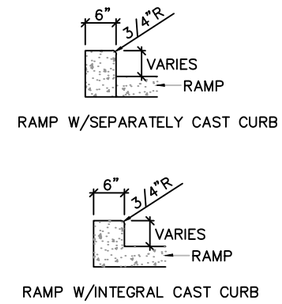

RAMP CURB OPTIONS

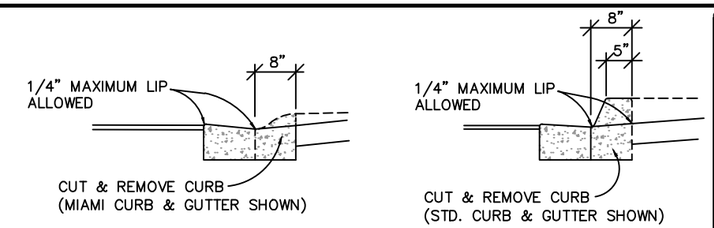

SECTION "C-C"

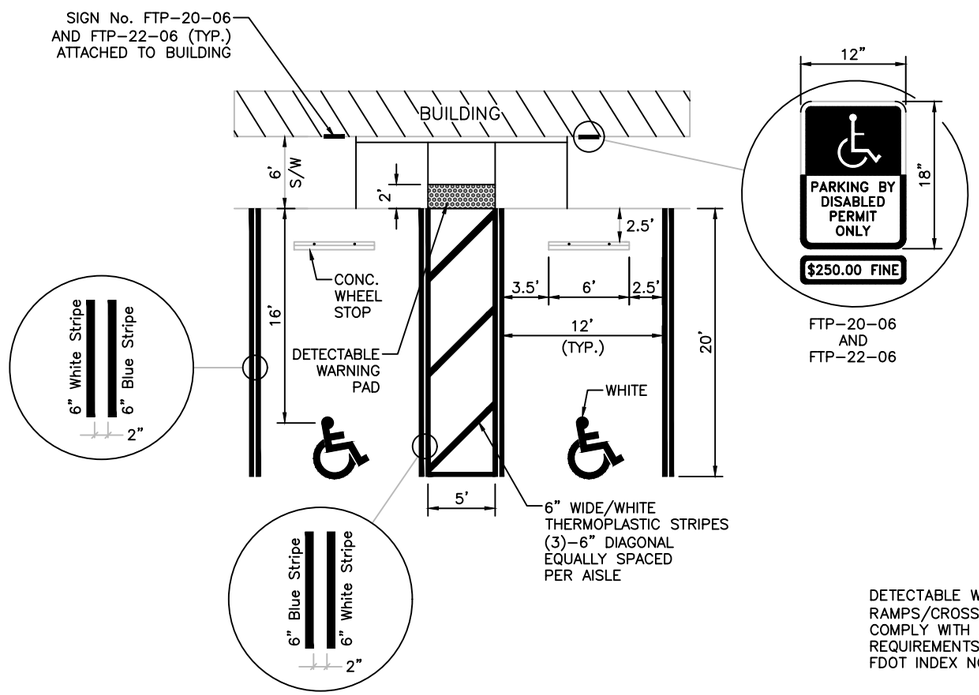

NOTES:

1. EACH SUCH PARKING SPACE SHALL BE CONSPICUOUSLY OUTLINED IN BLUE THERMOPLASTIC, AND SHALL BE POSTED AND MAINTAINED WITH A PERMANENT, ABOVE-GRADE SIGN BEARING THE INTERNATIONAL SYMBOL OF ACCESSIBILITY OR THE CAPTION "PARKING BY DISABLED PERMIT ONLY", OR BEARING BOTH SUCH SYMBOLS AND CAPTION. SUCH SIGNS SHALL NOT BE OBSCURED BY A VEHICLE PARKED IN THE SPACE. ALL ADA PARKING SPACES MUST BE DESIGNED AND MARKED IN ACCORDANCE WITH THE STANDARDS ADOPTED BY THE DEPARTMENT OF TRANSPORTATION.
2. THE FTP-22-06 PANEL SHALL BE MOUNTED BELOW THE FTP-20-06 SIGN.

ADA PARKING DETAIL

N.T.S.

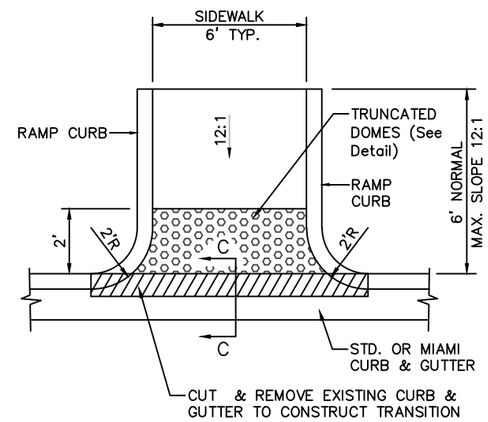

PLAN VIEW

N.T.S.

DETECTABLE WARNINGS IN CURB RAMPS/CROSSWALKS SHALL COMPLY WITH ALL ADA REQUIREMENTS INCLUDING FDOT INDEX NO. 522

NOTE: ALL NEW CONCRETE RAMP SURFACES TO RECEIVE BROOM FINISH. SEE FDOT STANDARD SPECIFICATIONS 522-7.2 (SURFACE REQUIREMENTS)

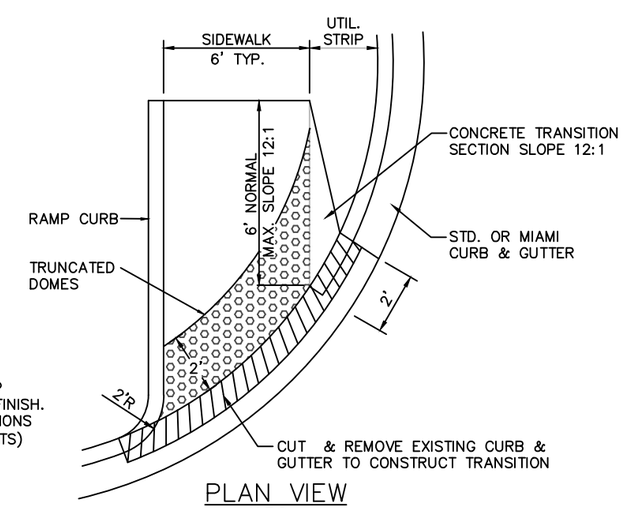

PLAN VIEW

N.T.S.

CURB CUT RAMP FOR ADA DETAIL

N.T.S.

TOCOL Engineering, LLC
714 NORTH ORANGE AVENUE, GREEN COVE SPRINGS, FL 32043
PH: 904-215-1388 E.B. NUMBER: 26383

ENGINEER OF RECORD CHARLES SOHM
FLORIDA REGISTRATION NUMBER: 79289

TYLER PLAZA WEST
FOR
TYLER PLAZA WEST, LLC

MISCELLANEOUS DETAILS

REVISIONS

PLOT DATE:
DRAWN BY:
DESIGNED BY:
CHECKED BY:
SCALE:
JOB NO.:

SHEET NO.
23A

Date: 11/8/23 Time: 6:08 PM DWG Name: \\TE-GCS\01-Projects\21-470 Tyler West Plaza 2021\03-CADD\08_21-470 MISC DETAILS.dwg Layout: 23A

R1–1
36"x36"

NOTE:

THE STOP SIGN SHALL BE OCTAGON WITH WHITE MESSAGE AND BORDER ON A RED BACKGROUND.

STOP

R11–2
24"x18"

ROAD CLOSED

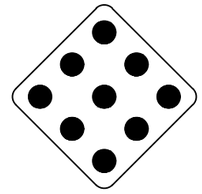

*OM4–1
18"x18"

END OF ROAD MARKER

SIGN DETAILS

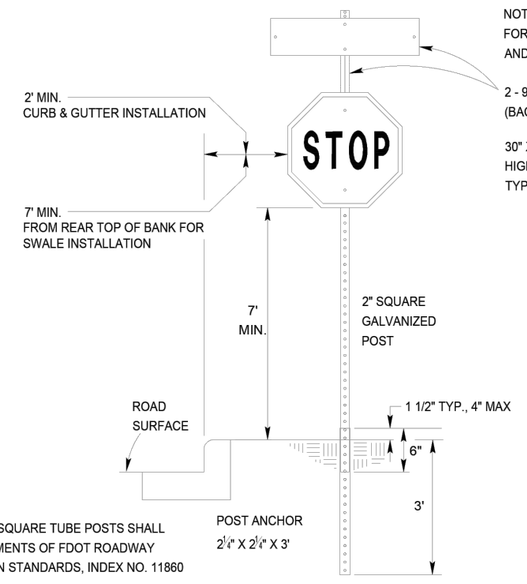

NOTE: LEAVE 2 HOLES FROM TOP OF POST FOR THE INSTALLATION OF CAPS, DEAD END AND NO OUTLET SIGN IF NEEDED.

2 - 9" STREET MARKER BLADES (BACK TO BACK)

30" X 30" STOP SIGN (MIN.) HIGH INTENSITY PRISMATIC SHEETING TYP.

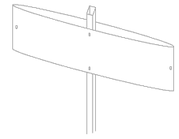

SIGN BLANKS ARE RIVETED TOGETHER AND RIVETED TO THE POST.

Pages Dairy 50000 RD

6" UPPER AND 4½" LOWER CASE

3" U.C. LETTERING AND NUMBERS

SHEETING - GREEN E C FILM OVER HIGH INTENSITY PRISMATIC, SILVER (PRIVATE- BLUE SHEETING)
SIGN BLANKS - 0.080 ALUMINUM 9"X42" TYP.

NOTES:

GALVANIZED STEEL SQUARE TUBE POSTS SHALL MEET THE REQUIREMENTS OF FDOT ROADWAY AND TRAFFIC DESIGN STANDARDS, INDEX NO. 11860

SIGN PLACEMENT SHALL MEET THE REQUIREMENTS OF FDOT ROADWAY AND TRAFFIC DESIGN STANDARDS, INDEX NO. 17302.

ROADWAY AND DRAINAGE STANDARDS NASSAU COUNTY PUBLIC WORKS ENGINEERING SERVICES DEPARTMENT	REVISION DATES	STOP AND STREET MARKER COMBINATION TYPICAL INSTALLATION	DETAIL NO. 21 DWG: ADOPTED:

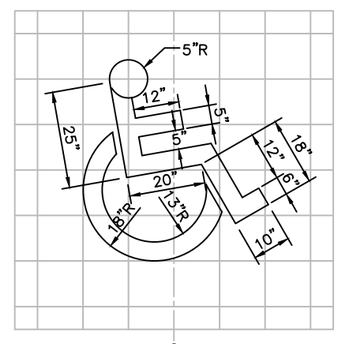

℄ PARKING SPACE

NOTE: SYMBOL SHALL BE PAINTED WITH WHITE TRAFFIC PAINT WITHIN OUTLINE SHOWN.

ADA SYMBOL DETAIL
N.T.S.

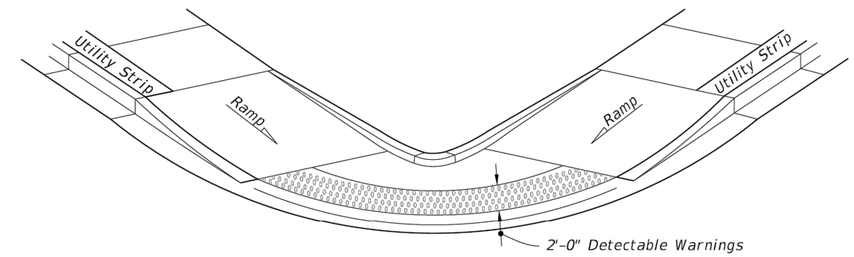

OPTION A

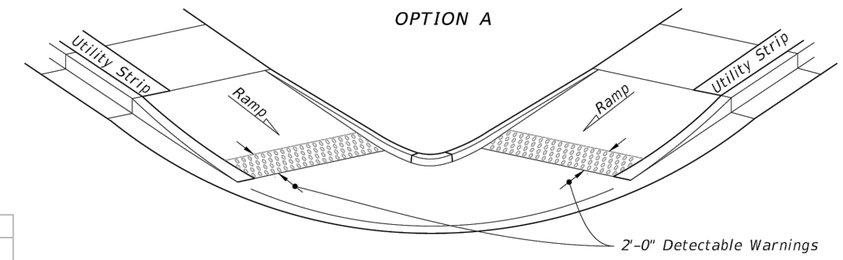

OPTION B

ISOMETRIC VIEW

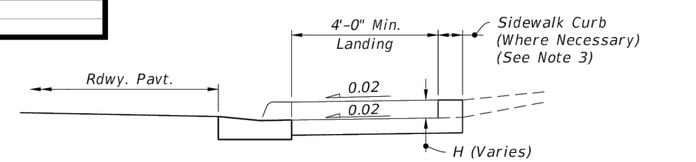

SECTION E-E

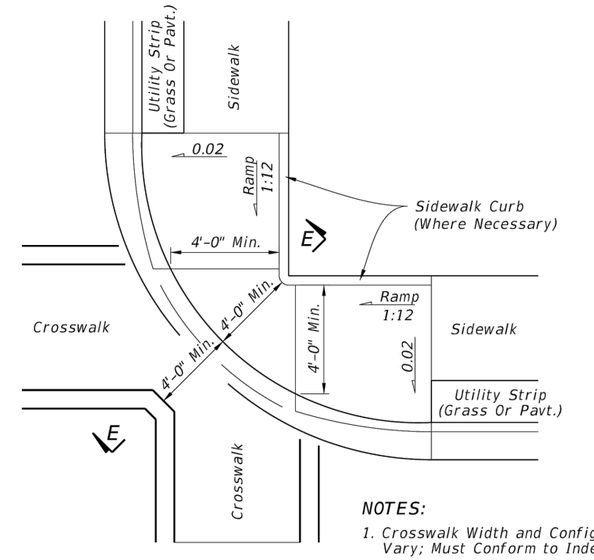

PLAN VIEW

CR-L

NOTES:

1. Crosswalk Width and Configuration Vary; Must Conform to Index 711-001.
2. 15' Radius Curve Shown for CR-L.
3. For additional information on sidewalk curb construction, see SIDEWALK CURB OPTIONS details, on Sheet 3.

CURB CUT RAMP FOR ADA DETAIL
N.T.S.

TOCOL Engineering, LLC
714 NORTH ORANGE AVENUE, GREEN COVE SPRINGS, FL 32043
PH: 904-215-1388 E.B. NUMBER: 26383

ENGINEER OF RECORD
CHARLES SOHM
FLORIDA
REGISTRATION NUMBER:
79289

TYLER PLAZA WEST
FOR
TYLER PLAZA WEST, LLC

MISCELLANEOUS DETAILS

REVISIONS

PLOT DATE:
DRAWN BY:
DESIGNED BY:
CHECKED BY:
SCALE:
JOB NO.:

SHEET NO.
23B

Date: 11/8/23 Time: 6:09 PM DWG Name: \\TE-GCS\01-Projects\21-470 Tyler West Plaza 2021\03-CADD\08_21-470 MISC DETAILS.dwg Layout: 23B

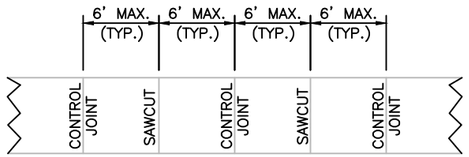

PLAN

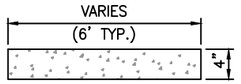

SECTION

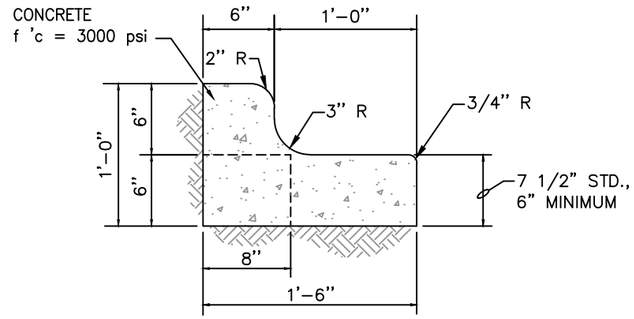

NOTE:
WHEN USED ON HIGH SIDE OF ROADWAYS, THE CROSS SLOPE OF THE GUTTER SHALL MATCH THE CROSS SLOPE OF THE ADJACENT PAVEMENT AND THE THICKNESS OF THE LIP SHALL BE 6", UNLESS OTHERWISE SHOWN ON PLANS.

STANDARD TYPE CURB & GUTTER

N.T.S.

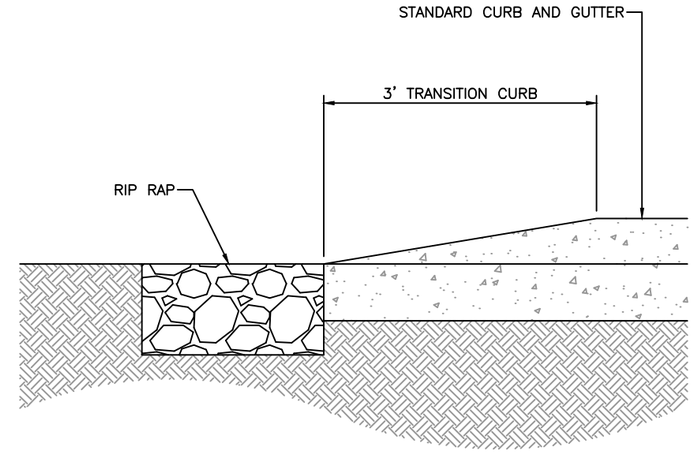

TRANSITION CURB FRONT VIEW

N.T.S.

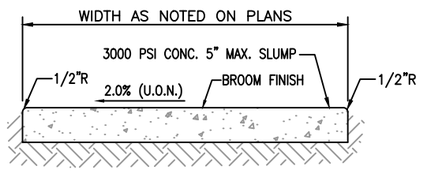

SECTION DETAILS

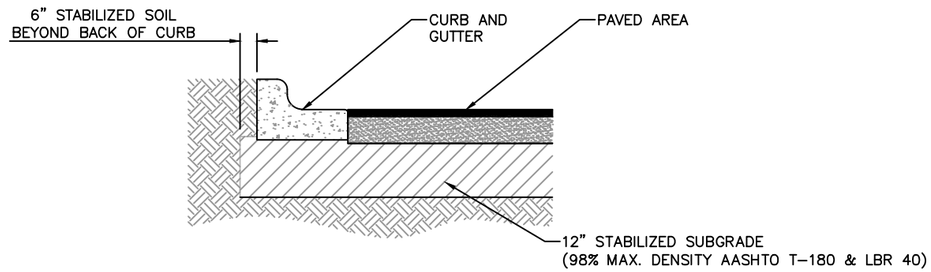

SOIL STABILIZATION DETAIL

N.T.S.

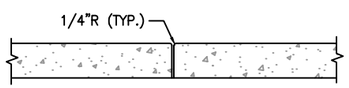

PROVIDE AT INTERVALS SHOWN IN PLAN VIEW
CONTROL JOINT (1-1/2" DEEP)

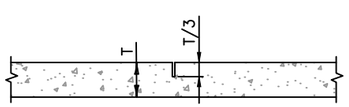

PROVIDE AT INTERVALS SHOWN IN PLAN VIEW
SAWCUT

SIDEWALKS SHALL BE CONSTRUCTED OF PORTLAND CEMENT CONCRETE, CLASS NON-STRESS (NS), AND ALL METHODS OF CONSTRUCTION AND MATERIALS SHALL BE IN ACCORDING TO THE LATEST EDITION OF THE FLORIDA DEPARTMENT OF TRANSPORTATION STANDARD SPECIFICATIONS.

CONCRETE SIDEWALK DETAILS

N.T.S.

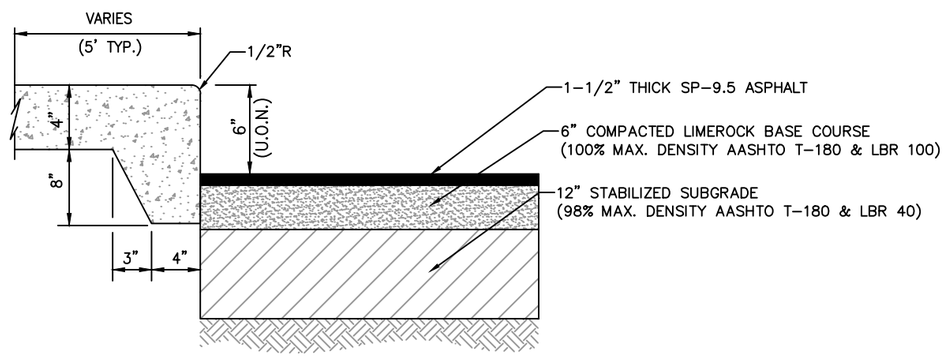

NOTE:
UNDERCUT ALL UNSUITABLE MATERIAL AND BACKFILL WITH CLEAN FREE-DRAINING SAND (BOTTOM OF CUT SHALL BE 24" MIN. BELOW FINISH GRADE)

SIDEWALK DETAIL AT PAVEMENT AND NEW ASPHALT PAVEMENT SECTION

N.T.S.

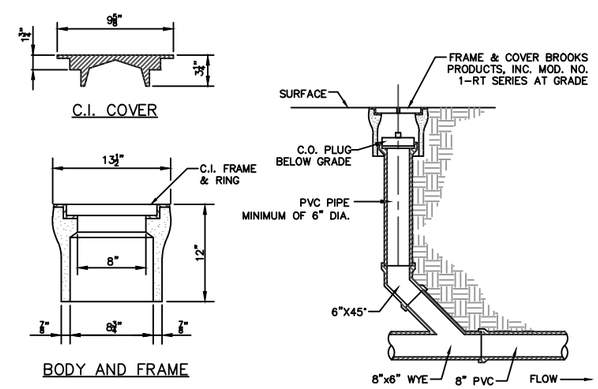

CLEAN-OUT BOX WITH CAST IRON RING AND COVER IN NON-PAVED AREAS ONLY

CLEANOUT STRUCTURE

N.T.S.

TOCOL Engineering, LLC
714 NORTH ORANGE AVENUE, GREEN COVE SPRINGS, FL 32043
PH: 904-215-1388 E.B. NUMBER: 26383

ENGINEER OF RECORD
CHARLES SOHM
FLORIDA REGISTRATION NUMBER: 79289

TYLER PLAZA WEST
FOR
TYLER PLAZA WEST, LLC

MISCELLANEOUS DETAILS

REVISIONS

PLOT DATE:
DRAWN BY:
DESIGNED BY:
CHECKED BY:
SCALE:
JOB NO.:

SHEET NO.
23C

Date: 11/8/23 Time: 6:09 PM DWG Name: \\TE-GCS\01-Projects\21-470 Tyler West Plaza 2021\03-CADD\08_21-470 MISC DETAILS.dwg Layout: 23C

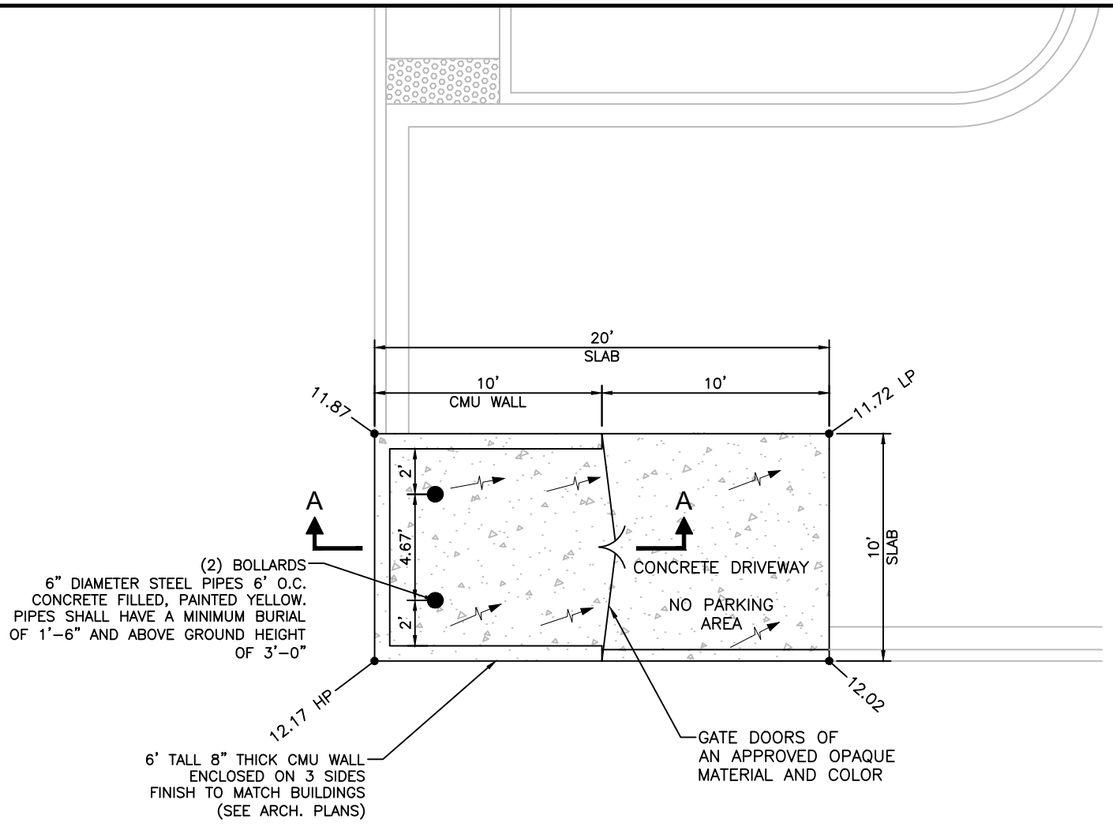

DUMPSTER PAD DETAIL
N.T.S.

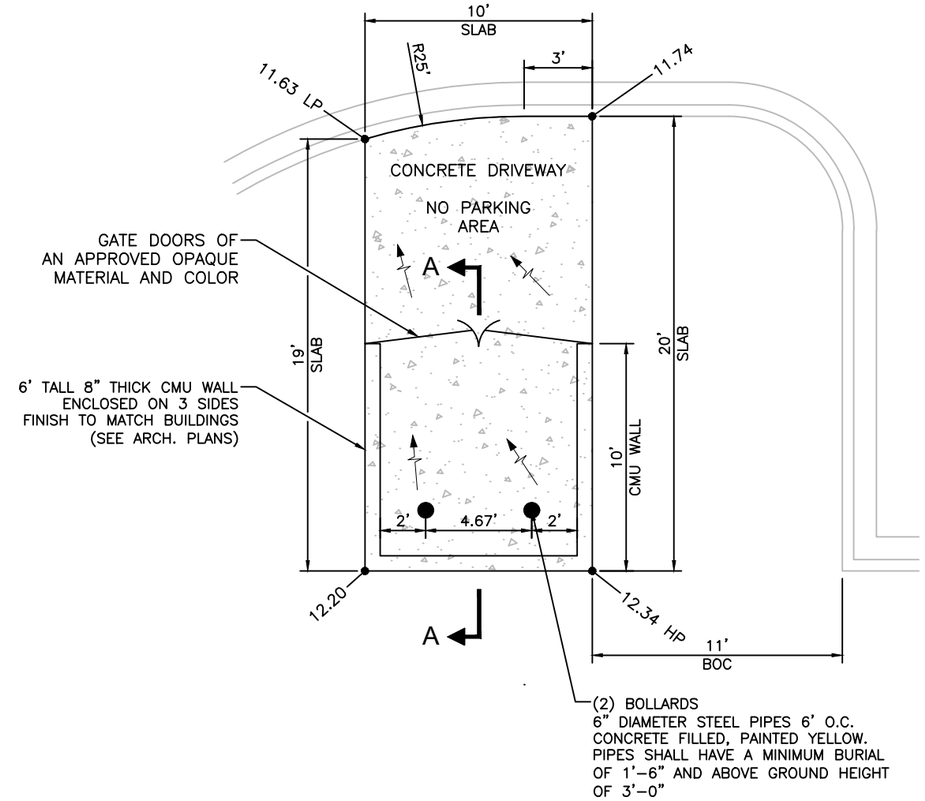

DUMPSTER PAD DETAIL
N.T.S.

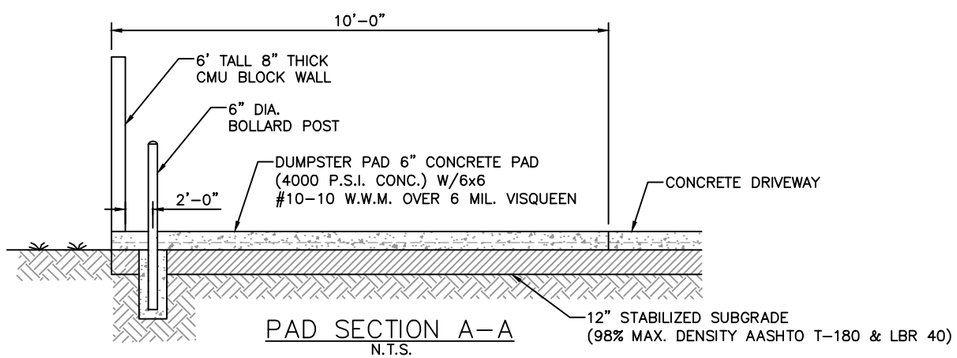

PAD SECTION A-A
N.T.S.

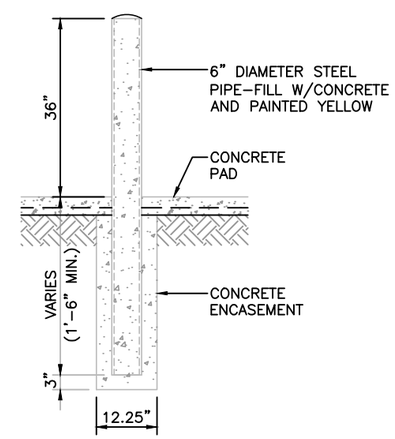

TYPICAL BOLLARD DETAIL
N.T.S.

TOCOL Engineering, LLC
714 NORTH ORANGE AVENUE, GREEN COVE SPRINGS, FL 32043
PH: 904-215-1388 E.B. NUMBER: 26383

ENGINEER OF RECORD
CHARLES SOHM
FLORIDA
REGISTRATION NUMBER:
79289

TYLER PLAZA WEST
FOR
TYLER PLAZA WEST, LLC

MISCELLANEOUS DETAILS

REVISIONS

PLOT DATE:
DRAWN BY:
DESIGNED BY:
CHECKED BY:
SCALE:
JOB NO.:

SHEET NO.
23D

Date: 11/8/23 Time: 6:10 PM DWG Name: \\TE-GCS\01-Projects\21-470 Tyler West Plaza 2021\03-CADD\08_21-470 MISC DETAILS.dwg Layout: 23D

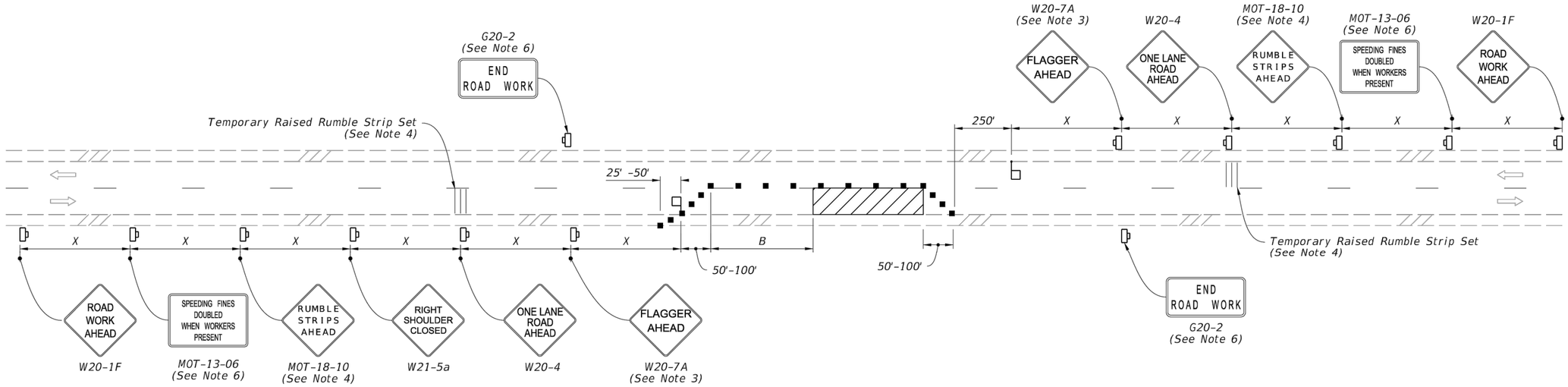

NOTES:

1. This Index applies to Two-Lane, Two-Way Roadways with work within the traveled way.

2. L = Taper Length
   B = Buffer Length
   X = Work Zone Sign Spacing
   See Index 102-600 for "L", "B", "X" and channelizing device spacing values.

3. Optionally, use "Flagger Ahead" sign with symbol (W20-7) instead of "Flagger Ahead" sign with text (W20-7A).

4. Use temporary raised rumble strips when the existing posted speed is 55 mph or greater and the work duration is greater than 60 minutes. If temporary raised rumble strips are not used, omit "Rumble Strips Ahead" signs (MOT-18-10) and associated work zone sign spacing.

5. Additional one-way control may be provided by the following means:
   a. Flag-carrying vehicle
   b. Official vehicle
   c. Pilot vehicles
   d. Traffic signals

   When flaggers are the sole means of one-way control, the flaggers must be in sight of each other or in direct communication at all times.

6. The "Speeding Fines Doubled When Workers Present" signs (MOT-13-06) and "End Road Work" signs (G20-2), along with associated work zone sign spacing, may be omitted when the work operation will be in place for 24 hours or less.

7. Automated Flagger Assistance Devices (AFADs) may be used in accordance with Specification Sections 102, 990 and the APL vendor drawings.

8. Railroad Crossings:

   a. If an active railroad crossing is located closer to the Work Area than the queue length plus 300 feet, extend the Buffer Space as shown on Sheet 2.

   b. If the queuing of vehicles across an active railroad crossing cannot be avoided, provide a uniformed traffic control officer or flagger at the highway-rail grade crossing to prevent vehicles from stopping within the highway-rail grade crossing, even if automatic train warning devices are in place.

SYMBOLS:

- Work Area
- Channelizing Device (See Index 102-600)
- Work Zone Sign
- Flagger
- Lane Identification and Direction of Traffic

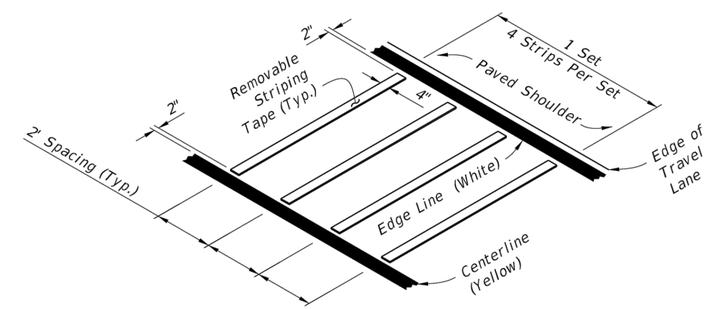

OPTION - 1
REMOVABLE STRIPING TYPE

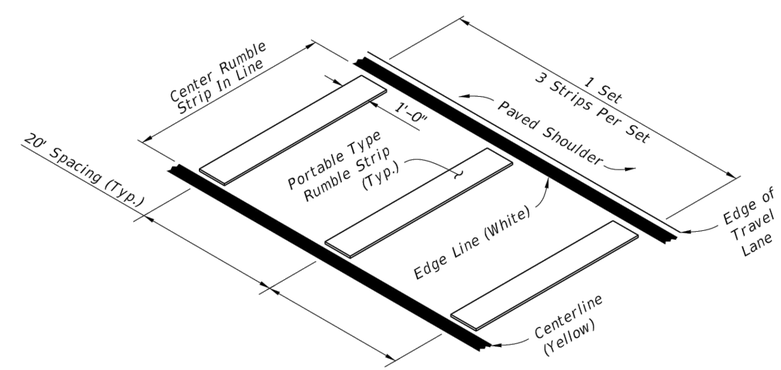

OPTION - 2
PORTABLE TYPE

RUMBLE STRIP SETS

LAST REVISION	REVISION	DESCRIPTION:
11/01/21		

FDOT
FY 2023-24
STANDARD PLANS

TWO-LANE, TWO-WAY
WORK WITHIN THE TRAVEL WAY

INDEX 102-603

SHEET 1 of 2

TOCOL Engineering, LLC
714 NORTH ORANGE AVENUE, GREEN COVE SPRINGS, FL 32043
PH: 904-215-1308 E.B. NUMBER: 26383

ENGINEER OF RECORD
CHARLES SOHM
FLORIDA
REGISTRATION NUMBER: 79289

TYLER PLAZA WEST
FOR
TYLER PLAZA WEST, LLC
MISCELLANEOUS DETAILS

REVISIONS

PLOT DATE:
DRAWN BY:
DESIGNED BY:
CHECKED BY:
SCALE:
JOB NO.:

SHEET NO.
23E

Date: 11/8/23 Time: 6:11 PM DWG Name: \\TE-GCS\01-Projects\21-470 Tyler West Plaza 2021\03-CADD\08_21-470 MISC DETAILS.dwg Layout: 23E
10/6/2022 1:24:30 PM

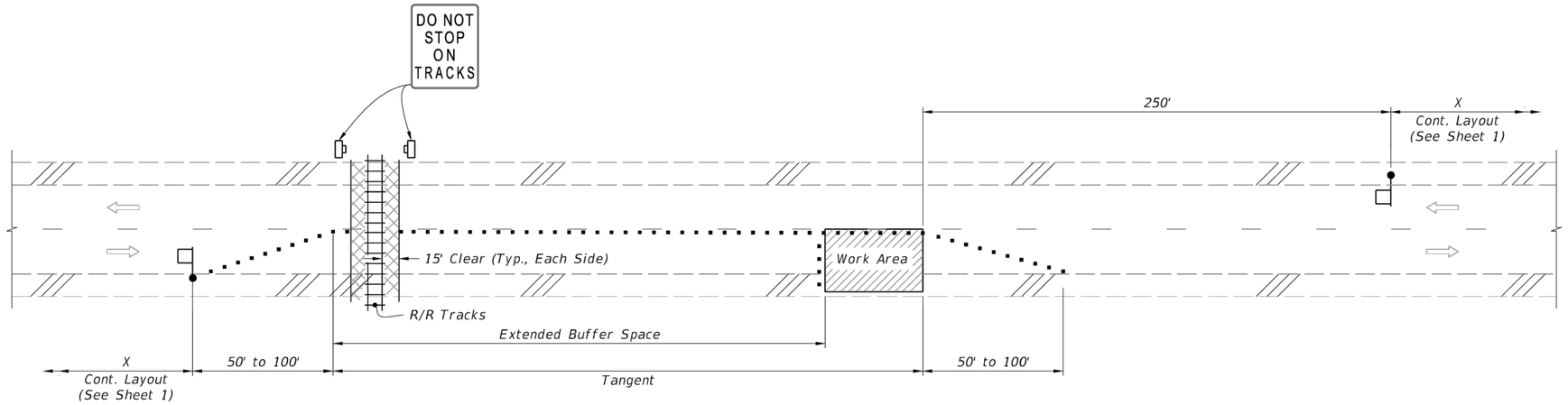

TEMPORARY RAILROAD CROSSING BUFFER SPACE EXTENSION

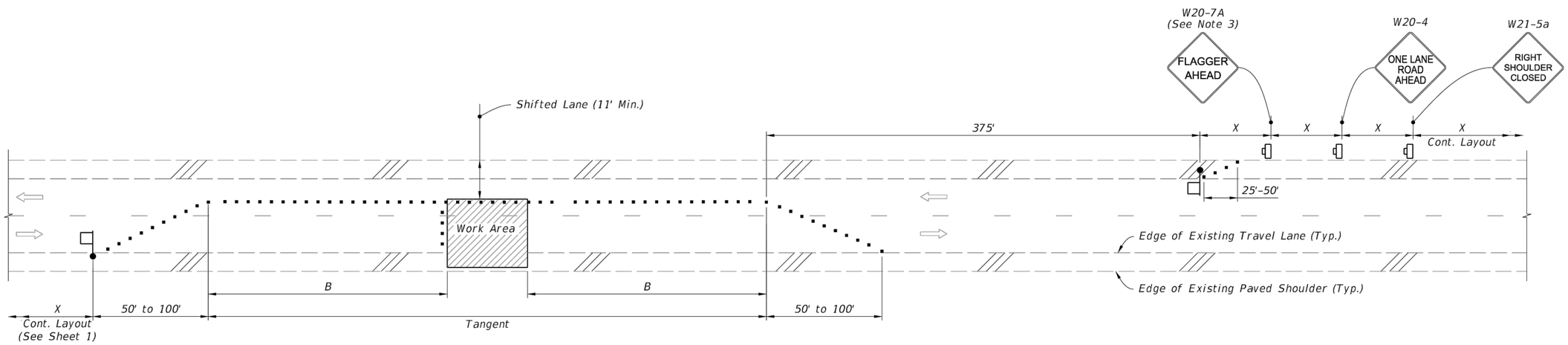

TEMPORARY LANE SHIFT TO SHOULDER WHEN WORK AREA ENCROACHES ON THE CENTERLINE
(For Work Operations In place 24 Hours or Less)

SYMBOLS:

- Work Area
- Channelizing Device (See Index 102-600)
- Work Zone Sign
- Flagger
- Lane Identification and Direction of Traffic

SPECIAL CONDITIONS

LAST REVISION	REVISION	DESCRIPTION:	FY 2023-24 STANDARD PLANS	TWO-LANE, TWO-WAY WORK WITHIN THE TRAVEL WAY	INDEX	SHEET
11/01/21					102-603	2 of 2

TOCOL Engineering, LLC
714 NORTH ORANGE AVENUE, GREEN COVE SPRINGS, FL 32043
PH: 904-215-1388 E.B. NUMBER: 26383

ENGINEER OF RECORD
CHARLES SOHM
FLORIDA REGISTRATION NUMBER: 79289

TYLER PLAZA WEST
FOR
TYLER PLAZA WEST, LLC

MISCELLANEOUS DETAILS

REVISIONS

PLOT DATE:
DRAWN BY:
DESIGNED BY:
CHECKED BY:
SCALE:
JOB NO.:

SHEET NO.
23F

Date: 11/8/23 Time: 6:12 PM DWG Name: \\TE-GCS\01-Projects\21-470 Tyler West Plaza 2021\03-CADD\08_21-470 MISC DETAILS.dwg Layout: 23F
10/6/2022 1:24:30 PM

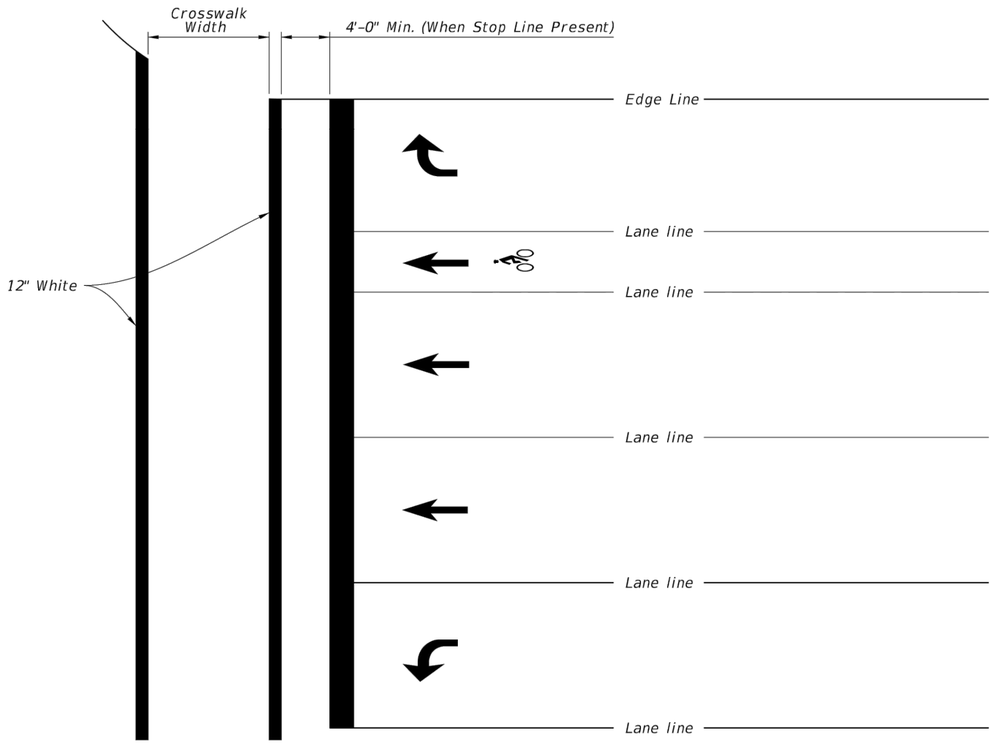

STANDARD CROSSWALK DETAILS

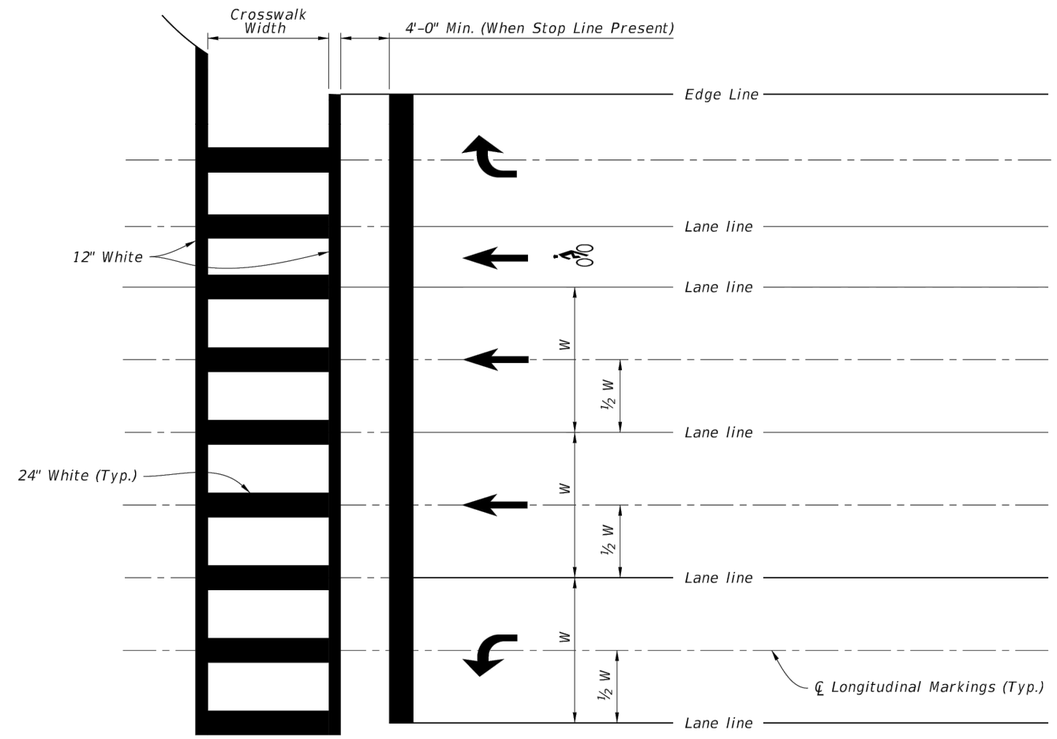

SPECIAL EMPHASIS CROSSWALK DETAILS

NOTES:

1. For crosswalk width, exceed width of the adjacent sidewalk, but do not make width less than 6' for intersection crosswalks and 10' for midblock crosswalks. Measure width from the inside of the transverse crosswalk markings.

2. When the Special Emphasis Crosswalk is not perpendicular to the lane lines, make the longitudinal markings parallel to the lane lines.

3. Refer to Index 522-002 when Curb Ramps are present.

LAST REVISION	REVISION	DESCRIPTION:	FY 2023-24 STANDARD PLANS	PAVEMENT MARKINGS	INDEX	SHEET
11/01/21					711-001	9 of 13

TOCOL Engineering, LLC
714 NORTH ORANGE AVENUE, GREEN COVE SPRINGS, FL 32043
PH: 904-215-1388 E.B. NUMBER: 26383

ENGINEER OF RECORD
CHARLES SOHM
FLORIDA
REGISTRATION NUMBER: 79289

TYLER PLAZA WEST
FOR
TYLER PLAZA WEST, LLC

MISCELLANEOUS DETAILS

REVISIONS

PLOT DATE:
DRAWN BY:
DESIGNED BY:
CHECKED BY:
SCALE:
JOB NO.:

SHEET NO.
23G

Date: 11/8/23 Time: 6:13 PM DWG Name: \\TE-GCS\01-Projects\21-470 Tyler West Plaza 2021\03-CADD\08_21-470 MISC DETAILS.dwg Layout: 23G
10/7/2022 2:50:27 PM

STORM WATER POLLUTION PREVENTION PLAN

CITY'S REQUIREMENTS

SITE DESCRIPTION

PROJECT NAME AND LOCATION:
TYLER PLAZA WEST
EAST SR 200
YULEE, FL 32097

OWNER NAME AND ADDRESS:
TYLER PLAZA WEST, LLC
DAVID ERGISI
13553 ATLANTIC BLVD, STE. 201
JACKSONVILLE, FL 32225

DESCRIPTION
PARCELS 1-4 1-20 & 1-21 IN OR
2179/753

SOIL DISTURBING ACTIVITIES WILL INCLUDE:
CLEARING AND GRUBBING; EARTHWORK, PAVEMENT AND GRADING; STORM SEWER, UTILITIES, AND PREPARATION FOR FINAL PLANTING AND SEEDING.

RUNOFF CURVE NUMBERS:
1. PRE-CONSTRUCTION =
2. DURING CONSTRUCTION =
3. POST-CONSTRUCTION =

SOILS:
SEE SOIL BORING REPORT FOR SOILS DATA

SITE MAPS:
* SEE ATTACHED GRADING PLAN FOR PRE & POST DEVELOPMENT GRADES, AREAS OF SOILS, DISTURBANCE, LOCATION OF SURFACE WATERS, WETLANDS, PROTECTED AREAS, MAJOR STRUCTURAL AND NONSTRUCTURAL CONTROLS AND STORM WATER DISCHARGE POINTS.
* SEE ATTACHED EROSION & TURBIDITY CONTROL PLAN FOR LOCATION OF TEMPORARY STABILIZATION PRACTICES, AND TURBIDITY BARRIERS
* SEE GENERAL NOTES FOR REQUIRMENTS FOR TEMPORARY AND PERMANENT STABILIZATION.

SITE AREA:
1. TOTAL AREA OF SITE =
2. TOTAL AREA TO BE DISTURBED =

NAME OF RECEIVING WATERS:

CONTROLS

THIS PLAN UTILIZES BEST MANAGEMENT PRACTICES TO CONTROL EROSION AND TURBIDITY CAUSED BY STORM WATER RUN OFF. AN EROSION AND TURBIDITY PLAN HAS BEEN PREPARED TO INSTRUCT THE CONTRACTOR ON PLACEMENT OF THESE CONTROLS. IT IS THE CONTRACTORS RESPONSIBILITY TO INSTALL AND MAINTAIN THE CONTROLS PER PLAN AS WELL AS ENSURING THE PLAN IS PROVIDING THE PROPER PROTECTION AS REQUIRED BY FEDERAL, STATE AND LOCAL LAWS. REFER TO "CONTRACTORS RESPONSIBILITY" FOR A VERBAL DESCRIPTION OF THE CONTROLS THAT MAY BE IMPLEMENTED.

STORM WATER MANAGEMENT

STORM WATER DRAINAGE WILL BE PROVIDED BY (DESRIPTION:) __________
____

FOR THE PROJECT. AREAS WHICH ARE NOT TO BE CONSTRUCTED ON, BUT WILL BE REGRADED SHALL BE STABILIZED IMMEDIATELY AFTER GRADING IS COMPLETE, WHEN CONSTRUCTION IS COMPLETE, A TOTAL OF ____ ACRES WILL HAVE BEEN REGRADED, ____ ACRES LEFT UNDISTURBED. THE SITE DISCHARGES TO A WET DETENTION SYSTEM. WHERE PRACTICAL, TEMPORARY SEDIMENT BASINS WILL BE USED TO INTERCEPT SEDIMENT BEFORE ENTERING THE PERMANENT DETENTION BASIN. THE WET DETENTION SYSTEM IS DESIGNED WITH A ____ DAY MINIMUM RESIDENCE VOLUME. THIS IS IN ACCORDANCE WITH THE REQUIREMENTS SET FORTH BY THE ST. JOHNS RIVER WATER MANAGEMENT DISTRICT FOR THIS TYPE OF DEVELOPMENT AT THE TIME OF PERMITTING.

TIMING OF CONTROLS/MEASURES

REFER TO " CONTRACTORS RESPONSIBILITY" FOR THE TIMING OF CONTROL/MEASURES.

CERTIFICATION OF COMPLIANCE WITH FEDERAL, STATE AND LOCAL REGULATIONS

IN ACCORDANCE WITH FEDERAL, STATE AND LOCAL LAWS RELATED TO STORM WATER MANAGEMENT AND EROSION AND TURBIDITY CONTROLS, THE FOLLOWING PERMITS HAVE BEEN OBTAINED.

D.E.R. DREDGE/FILL PERMIT # ____________________
C.O.E. DREDGE/FILL PERMIT # ____________________
S.J.R.W.M.D. M.S.S.W. PERMIT #____________________

POLLUTION PREVENTION PLAN CERTIFICATION

I CERTIFY UNDER PENALTY OF LAW THAT THIS DOCUMENT AND ALL ATTACHMENTS WERE PREPARED UNDER MY DIRECTION OR SUPERVISION IN ACCORDANCE WITH A SYSTEM DESIGNED TO ASSURE THAT QUALIFIED PERSONNEL PROPERLY GATHERED AND EVALUATED THE INFORMATION SUBMITTED. BASED ON MY INQUIRY OF THE PERSON OR PERSONS WHO MANAGE THE SYSTEM, OR THOSE PERSONS DIRECTLY RESPONSIBLE FOR GATHERING THE INFORMATION, THE INFORMATION SUBMITTED IS, TO THE BEST OF MY KNOWLEDGE AND BELIEF, TRUE, ACCURATE, AND COMPLETE. I AM AWARE THAT THERE ARE SIGNIFICANT PENALTIES FOR SUBMITTING FALSE INFORMATION, INCLUDING THE POSSIBILITY OF FINE AND IMPRISONMENT FOR KNOWING VIOLATIONS.

SIGNED: ______________________________
CITY ENGINEER

CONTRACTOR'S REQUIREMENTS

GENERAL

THE CONTRACTOR SHALL AT A MINIMUM IMPLEMENT THE CONTRACTOR'S REQUIREMENTS OUTLINED BELOW AND THOSE MEASURES SHOWN ON THE EROSION AND TURBIDITY CONTROL PLAN. IN ADDITION THE CONTRACTOR SHALL UNDERTAKE ADDITIONAL MEASURES REQUIRED TO BE IN COMPLIANCE WITH APPLICABLE PERMIT CONDITIONS AND STATE WATER QUALITY STANDARDS. DEPENDING ON THE NATURE OF MATERIALS AND METHODS OF CONSTRUCTION THE CONTRACTOR MAY BE REQUIRED TO ADD FLOCCULANTS TO THE RETENTION SYSTEM PRIOR TO PLACING THE SYSTEM INTO OPERATION.

SEQUENCE OF MAJOR ACTIVITIES:

THE ORDER OF ACTIVITIES WILL BE AS FOLLOWS:

1. INSTALL STABILIZED CONSTRUCTION ENTRANCE
2. INSTALL SILT FENCES AND HAY BALES AS REQUIRED
3. CLEAR AND GRUB FOR DIVERSION SWALES/DIKES AND SEDIMENT BASIN
4. CONSTRUCT SEDIMENTATION BASIN
5. CONTINUE CLEARING AND GRUBBING
6. STOCK PILE TOP SOIL IF REQUIRED
7. PERFORM PRELIMINARY GRADING ON SITE AS REQUIRED
8. STABILIZE DENUDED AREAS AND STOCKPILES AS SOON AS PRACTICABLE
9. INSTALL UTILITIES, STORM SEWER, CURBS & GUTTER.
10. APPLY BASE TO PROJECT
11. COMPLETE GRADING AND INSTALL PERMANENT SEEDING/SOD AND PLANTING
12. COMPLETE FINAL PAVING
13. REMOVE ACCUMULATED SEDIMENT FROM BASINS
14. WHEN ALL CONSTRUCTION ACTIVITY IS COMPLETE AND THE SITE IS STABILIZED, REMOVE ANY TEMPORARY DIVERSION SWALES/DIKES AND RESEED/SOD AS REQUIRED

TIMING OF CONTROLS/MEASURES

AS INDICATED IN THE SEQUENCE OF MAJOR ACTIVITIES, THE SILT FENCES AND HAY BALES, STABILIZED CONSTRUCTION ENTRANCE AND SEDIMENT BASIN WILL BE CONSTRUCTED PRIOR TO CLEARING OR GRADING OF ANY OTHER PORTIONS OF THE SITE. STABILIZATION MEASURES SHALL BE INITIATED AS SOON AS PRACTICAL IN PORTIONS OF THE SITE WHERE CONSTRUCTION ACTIVITIES HAVE TEMPORARILY OR PERMANENTLY CEASED. ONCE CONSTRUCTION ACTIVITY CEASES PERMANENTLY IN AN AREA, THAT AREA WILL BE STABILIZED PERMANENTLY IN ACCORDANCE WITH THE PLANS. AFTER THE ENTIRE SITE IS STABILIZED, THE ACCUMULATED SEDIMENT WILL BE REMOVED FROM THE SEDIMENT TRAPS AND THE EARTH DIKE/SWALES WILL BE REGRADED/REMOVED AND STABILIZED IN ACCORDANCE WITH THE EROSION & TURBIDITY CONTROL PLAN.

CONTROLS

IT IS THE CONTRACTORS RESPONSIBILITY TO IMPLEMENT THE EROSION AND TURBIDITY CONTROLS AS SHOWN ON THE EROSION AND TURBIDITY CONTROL PLAN. IT IS ALSO THE CONTRACTORS RESPONSIBILITY TO ENSURE THESE CONTROLS ARE PROPERLY INSTALLED , MAINTAINED AND FUNCTIONING PROPERLY TO PREVENT TURBID OR POLLUTED WATER FROM LEAVING THE PROJECT SITE. THE CONTRACTOR WILL ADJUST THE EROSION AND TURBIDITY CONTROLS SHOWN ON THE EROSON AND TURBIDITY CONTROL PLAN AND ADD ADDITIONAL CONTROL MEASURES, AS REQUIRED,TO ENSURE THE SITE MEETS ALL FEDERAL, STATE AND LOCAL EROSION AND TURBIDITY CONTROL REQUIREMENTS. THE FOLLOWING BEST MANAGEMENT PRACTICES WILL BE IMPLEMENTED BY THE CONTRACTOR AS REQUIRED BY THE EROSION AND TURBIDITY CONTROL PLAN AND AS REQUIRED TO MEET THE EROSION AND TURBIDITY REQUIREMENTS IMPOSED ON THE PROJECT SITE BY THE REGULATORY AGENCIES.

EROSION AND SEDIMENT CONTROLS
STABILIZATION PRACTICES

1. HAY BALE BARRIER: HAY BALE BARRIERS CAN BE USED BELOW DISTURBED AREAS SUBJECT TO SHEET AND RILL EROSION WITH THE FOLLOWING LIMITATIONS:
   A. WHERE THE MAXIMUM SLOPE BEHIND THE BARRIER IS 33 PERCENT.
   B. IN MINOR SWALES OR DITCH LINES WHERE THE MAXIMUM CONTRIBUTING DRAINAGE AREA IS NO GREATER THAN 2 ACRES.
   C. WHERE EFFECTIVENESS IS REQUIRED FOR LESS THAN 3 MONTHS.
   D. EVERY EFFORT SHOULD BE MADE TO LIMIT THE USE OF STRAW BALE BARRIERS CONSTRUCTED IN LIVE STREAMS OR IN SWALES WHERE THERE IS THE POSSIBILITY OF A WASHOUT. IF NECESSARY, MEASURES SHALL BE TAKEN TO PROPERLY ANCHOR BALES TO INSURE AGAINST WASHOUT.
   REFER TO CITY STANDARD DETAIL D-913 FOR CONSTRUCTING THE HAY BALE BARRIER. ALSO REFER TO D-901, D-911 AND D-12 FOR PROPER LOCATION, MATERIAL & USAGE.
2. FILTER FABRIC BARRIER: FILTER FABRIC BARRIERS CAN BE USED BELOW DISTURBED AREAS SUBJECT TO SHEET AND RILL EROSION WITH THE FOLLOWING LIMITATIONS:
   A. WHERE THE MAXIMUM SLOPE BEHIND THE BARRIER IS 33 PERCENT.
   B. IN MINOR SWALES OR DITCH LINES WHERE THE MAXIMUM CONTRIBUTING DRAINAGE AREA IS NO GREATER THAN 2 ACRES.
   REFER TO CITY STANDARD DETAIL D-910 FOR PROPER CONSTRUCTION OF THE FILTER FABRIC BARRIER.
3. BRUSH BARRIER WITH FILTER FABRIC: BRUSH BARRIER MAY BE USED BELOW DISTURBED AREAS SUBJECT TO SHEET AND RILL EROSION WHERE ENOUGH RESIDUE MATERIAL IS AVAILABLE ON SITE.
4. LEVEL SPREADER: A LEVEL SPREADER MAY BE USED WHERE SEDIMENT-FREE STORM RUNOFF IS INTERCEPTED AND DIVERTED AWAY FROM THE GRADED AREAS ONTO UNDISTURBED STABILIZED AREAS. THIS PRACTICE APPLIES ONLY IN THOSE SITUATIONS WHERE THE SPREADER CAN BE CONSTRUCTED ON UNDISTURBED SOIL AND THE AREA BELOW THE LEVEL LIP IS STABILIZED. THE WATER SHOULD NOT BE ALLOWED TO RECONCENTRATE AFTER RELEASE. LEVEL SPREADER SHALL BE CONSTRUCTED IN ACCORDANCE TO CITY STANDARD DETAIL D-914.
5. STOCKPILING MATERIAL: NO EXCAVATED MATERIAL SHALL BE STOCKPILED IN SUCH A MANNER AS TO DIRECT RUNOFF DIRECTLY OFF THE PROJECT SITE INTO ANY ADJACENT WATER BODY OR STORM WATER COLLECTION FACILITY.
6. EXPOSED AREA LIMITATION: THE SURFACE AREA OF OPEN, RAW ERODIBLE SOIL EXPOSED BY CLEARING AND GRUBBING OPERATIONS OR EXCAVATION AND FILLING OPERATIONS SHALL NOT EXCEED 10 ACRES. THIS REQUIREMENT MAY BE WAIVED FOR LARGE PROJECTS WITH AN EROSION CONTROL PLAN WHICH DEMONSTRATES THAT OPENING OF ADDITIONAL AREAS WILL NOT SIGNIFICANTLY AFFECT OFF-SITE DEPOSIT OF SEDIMENTS.
7. INLET PROTECTION: INLETS AND CATCH BASINS WHICH DISCHARGE DIRECTLY OFF-SITE SHALL BE PROTECTED FROM SEDIMENT-LADEN STORM RUNOFF UNTIL THE COMPLETION OF ALL CONSTRUCTION OPERATIONS THAT MAY CONTRIBUTE SEDIMENT TO THE INLET.
8. TEMPORARY SEEDING: AREAS OPENED BY CONSTRUCTION OPERATIONS AND THAT ARE NOT ANTICIPATED TO BE RE-EXCAVATED OR DRESSED AND RECEIVE FINAL GRASSING TREATMENT WITHIN 30 DAYS SHALL BE SEEDED WITH A QUICK GROWING GRASS SPECIES WHICH WILL PROVIDE AN EARLY COVER DURING THE SEASON IN WHICH IT IS PLANTED AND WILL NOT LATER COMPETE WITH THE PERMANENT GRASSING.
9. TEMPORARY SEEDING AND MULCHING: SLOPES STEEPER THAN 6:1 THAT FALL WITHIN THE CATEGORY ESTABLISHED IN PARAGRAPH 8 ABOVE SHALL ADDITIONALLY RECEIVE MULCHING OF APPROXIMATELY 2 INCHES LOOSE MEASURE OF MULCH MATERIAL CUT INTO THE SOIL OF THE SEEDED AREA ADEQUATE TO PREVENT MOVEMENT OF SEED AND MULCH.
10. TEMPORARY GRASSING: THE SEEDED OR SEEDED AND MULCHED AREA(S) SHALL BE ROLLED AND WATERED OR HYDROMULCHED OR OTHER SUITABLE METHODS IF REQUIRED TO ASSURE OPTIMUM GROWING CONDITIONS FOR THE ESTABLISHMENT OF A GOOD GRASS COVER. TEMPORARY GRASSING SHALL BE THE SAME MIX & AMOUNT REQUIRED FOR PERMANENT GRASSING IN THE CONTRACT SPECIFICATIONS.
11. TEMPORARY REGRASSING : IF, AFTER 14 DAYS FROM SEEDING, THE TEMPORARY GRASSED AREAS HAVE NOT ATTAINED A MINIMUM OF 75 PERCENT GOOD GRASS COVER, THE AREA WILL BE REWORKED AND ADDITIONAL SEED APPLIED SUFFICIENT TO ESTABLISH THE DESIRED VEGETATIVE COVER.
12. MAINTENANCE: ALL FEATURES OF THE PROJECT DESIGNED AND CONSTRUCTED TO PREVENT EROSION AND SEDIMENT SHALL BE MAINTAINED DURING THE LIFE OF THE CONSTRUCTION SO AS TO FUNCTION AS THEY WERE ORIGINALLY DESIGNED AND CONSTRUCTED.
13. PERMANENT EROSION CONTROL: THE EROSION CONTROL FACILITIES OF THE PROJECT SHOULD BE DESIGNED TO MINIMIZE THE IMPACT ON THE OFFSITE FACILITIES.
14. PERMANENT SEEDING: ALL AREAS WHICH HAVE BEEN DISTURBED BY CONSTRUCTION WILL, AS A MINIMUM, BE SEEDED. THE SEEDING MIX MUST PROVIDE BOTH LONG-TERM VEGETATION AND RAPID GROWTH SEASONAL VEGETATION. SLOPES STEEPER THAN 4:1 SHALL BE SEEDED AND MULCHED OR SODDED.

STRUCTURAL PRACTICES

1. TEMPORARY DIVERSION DIKE: TEMPORARY DIVERSION DIKES MAY BE USED TO DIVERT RUNOFF THROUGH A SEDIMENT-TRAPPING FACILITY. AND IT SHALL BE CONSTRUCTED IN ACCORDANCE TO D-914.
2. TEMPORARY SEDIMENT TRAP: A SEDIMENT TRAP SHALL BE INSTALLED IN AN DRAINAGEWAY AT A STORM DRAIN INLET OR AT OTHER POINTS OF DISCHARGE FROM A DISTURBED AREA.
   THE FOLLOWING SEDIMENT TRAPS MAY BE CONSTRUCTED EITHER INDEPENDANTLY OR IN CONJUNCTION WITH A TEMPORARY DIVERSION DIKE:
   A. BLOCK & GRAVEL SEDIMENT FILTER - THIS PROTECTION IS APPLICABLE WHERE HEAVY FLOWS AND/OR WHERE AN OVERFLOW CAPACITY IS NECESSARY TO PREVENT EXCESSIVE PONDING AROUND THE STRUCTURE. REFER TO D-902 FOR CONSTRUCTION OF A CURB INLET SEDIMENT FILTER, AND D-904 FOR CONSTRUCTION OF A DROP INLET SEDIMENT FILTER.
   B. GRAVEL SEDIMENT TRAP - THIS PROTECTION IS APPLICABLE WHERE HEAVY CONCENTRATED FLOWS ARE EXPECTED, BUT NOT WHERE PONDING AROUND THE STRUCTURE MIGHT CAUSE EXCESSIVE INCONVENIENCE OR DAMAGE TO ADJACENT STRUCTURES & UNPROTECTED AREAS. REFER TO D-903 FOR CONSTRUCTION OF CURB INLET & DROP SEDIMENT TRAP.
   C. DROP INLET SEDIMENT TRAP - THIS PROTECTION IS APPLICABLE WHERE THE INLET DRAINS A RELATIVELY FLAT AREA ($S < 5\%$) AND WHERE SHEET OR OVERLAND FLOWS ($Q < 0.5$ CFS) ARE TYPICAL. THIS METHOD SHALL NOT APPLY TO INLETS RECEIVING CONCENTRATED FLOWS SUCH AS IN STREET OR HIGHWAY MEDIANS. REFER TO D-905 FOR CONSTRUCTION OF HAY BALE & FABRIC SEDIMENT FILTER.
3. OUTLET PROTECTION: APPLICABLE TO THE OUTLETS OF ALL PIPES AND PAVED CHANNEL SECTIONS WHERE THE FLOW COULD CAUSE EROSION & SEDIMENT PROBLEM TO THE RECEIVING WATER BODY. SILT FENCES & HAY BALES ARE TO BE INSTALLED IMMEDIATELY DOWNSTREAM OF THE DISCHARING STRUCTURE AS SHOWN ON THE OUTLET PROTECTION DETAIL.
4. SEDIMENT BASIN: WILL BE CONSTRUCTED AT THE COMMON DRAINAGE LOCATIONS THAT SERVE AN AREA WITH 10 OR MORE DISTURBED ACRES AT ONE TIME, THE PROPOSED STORM WATER PONDS (OR TEMPORARY PONDS) WILL BE CONSTRUCTED FOR USE AS SEDIMENT BASINS. THESE SEDIMENT BASINS MUST PROVIDE A MINIMUM OF 3,600 CUBIC FEET OF STORAGE PER ACRE DRAINED UNTIL FINAL STABILIZATION OF THE SITE.

THE 3,600 CUBIC FEET OF STORAGE AREA PER ACRE DRAINED DOES NOT APPLY TO FLOWS FROM OFFSITE AREAS AND FLOWS FROM ONSITE AREAS THAT ARE EITHER UNDISTURBED OR HAVE UNDERGONE FINAL STABILIZATION WHERE SUCH FLOWS ARE DIVERTED AROUND BOTH THE DISTURBED AREA AND THE SEDIMENT BASIN. ANY TEMPORARY SEDIMENT BASINS CONSTRUCTED MUST BE BACKFILLED AND COMPACTED IN ACCORDANCE WITH THE SPECIFICATIONS FOR STRUCTURAL FILL. ALL SEDIMENT COLLECTED IN PERMANENT OR TEMPORARY SEDIMENT TRAPS MUST BE REMOVED UPON FINAL STABILIZATION.

OTHER CONTROLS

WASTE DISPOSAL

WASTE MATERIALS

ALL WASTE MATERIALS EXCEPT LAND CLEARING DEBRIS SHALL BE COLLECTED AND STORED IN A SECURELY LIDDED METAL DUMPSTER. THE DUMPSTER WILL MEET ALL LOCAL AND STATE SOLID WASTE MANAGEMENT REGULATIONS. THE DUMPSTER WILL BE EMPTIED AS NEEDED AND THE TRASH WILL BE HAULED TO A STATE APPROVED LANDFILL. ALL PERSONNEL WILL BE INSTRUCTED REGARDING THE CORRECT PROCEDURE FOR WASTE DISPOSAL. NOTICES STATING THESE PRACTICES WILL BE POSTED AT THE CONSTRUCTION SITE BY THE CONSTRUCTION SUPERINTENDENT, THE INDIVIDUAL WHO MANAGES THE DAY-TO-DAY SITE OPERATIONS, WILL BE RESPONSIBLE FOR SEEING THAT THESE PROCEDURES ARE FOLLOWED.

HAZARDOUS WASTE

ALL HAZARDOUS WASTE MATERIALS WILL BE DISPOSED OF IN THE MANNER SPECIFIED BY LOCAL OR STATE REGULATION OR BY THE MANUFACTURER. SITE PERSONNEL WILL BE INSTRUCTED IN THESE PRACTICES AND THE SITE SUPERINTENDENT, THE INDIVIDUAL WHO MANAGES DAY-TO-DAY SITE OPERATIONS,WILL BE RESPONSIBLE FOR SEEING THAT THESE PRACTICES ARE FOLLOWED.

SANITARY WASTE

ALL SANITARY WASTE WILL BE COLLECTED FROM THE PORTABLE UNITS AS NEEDED TO PREVENT POSSIBLE SPILLAGE. THE WASTE WILL BE COLLECTED AND DEPOSED OF IN ACCORDANCE WITH STATE AND LOCAL WASTE DISPOSAL REGULATIONS FOR SANITARY SEWER OR SEPTIC SYSTEMS.

OFFSITE VEHICLE TRACKING

A STABILIZED CONSTRUCTION ENTRANCE WILL BE PROVIDED TO HELP REDUCE VEHICLE TRACKING OF SEDIMENTS. THE PAVED STREET ADJACENT TO THE SITE ENTRANCE WILL BE SWEPT DAILY TO REMOVE ANY EXCESS MUD, DIRT OR ROCK TRACKED FROM THE SITE. DUMP TRUCKS HAULING MATERIAL FROM THE CONSTRUCTION SITE WILL BE COVERED WITH A TARPAULIN.

INVENTORY FOR POLLUTION PREVENTION PLAN

THE MATERIALS OR SUBSTANCES LISTED BELOW ARE EXPECTED TO BE PRESENT ONSITE DURING CONSTRUCTION:

☐ Concrete ☐ Fertilizers ☐ Wood
☐ Asphalt ☐ Petroleum Based Products ☐ Masonry Blocks
☐ Tar ☐ Cleaning Solvents ☐ Roofing Materials
☐ Detergents ☐ Paints ☐ Metal Studs
☐ ________ ☐ ________ ☐ ________

SPILL PREVENTION

MATERIAL MANAGEMENT PRACTICES

THE FOLLOWING ARE THE MATERIAL MANAGEMENT PRACTICES THAT WILL BE USED TO REDUCE THE RISK OF SPILLS OR OTHER ACCIDENTAL EXPOSURE OF MATERIALS AND SUBSTANCES TO STORM WATER RUNOFF.

GOOD HOUSEKEEPING

THE FOLLOWING GOOD HOUSEKEEPING PRACTICES WILL BE FOLLOWED ONSITE DURING THE CONSTRUCTION PROJECT.

* AN EFFORT WILL BE MADE TO STORE ONLY ENOUGH PRODUCT REQUIRED TO DO THE JOB.
* ALL MATERIALS STORED ONSITE WILL BE STORED IN A NEAT, ORDERLY MANNER IN THEIR APPROPRIATE CONTAINERS AND, IF POSSIBLE, UNDER A ROOF OR OTHER ENCLOSURE.
* PRODUCTS WILL BE KEPT IN THEIR ORIGINAL CONTAINERS WITH THE ORIGINAL MANUFACTURER'S LABEL.
* SUBSTANCES WILL NOT BE MIXED WITH ONE ANOTHER UNLESS RECOMMENDED BY THE MANUFACTURER.
* WHENEVER POSSIBLE, ALL OF A PRODUCT WILL BE USED UP BEFORE DISPOSING OF THE CONTAINER.
* MANUFACTURER'S RECOMMENDATIONS FOR PROPER USE AND DISPOSAL WILL BE FOLLOWED.
* THE SITE SUPERINTENDENT WILL INSPECT DAILY TO ENSURE MATERIALS ONSITE RECEIVE PROPER USE AND DISPOSAL.

HAZARDOUS PRODUCTS

THESE PRACTICES ARE USED TO REDUCE THE RISKS ASSOCIATED WITH HAZARDOUS MATERIALS.

* PRODUCTS WILL BE KEPT IN ORIGINAL CONTAINERS UNLESS THEY ARE NOT RESEALABLE.
* ORIGINAL LABELS AND MATERIAL SAFETY DATA WILL BE RETAINED; THEY CONTAIN IMPORTANT PRODUCT INFORMATION.
* IF SURPLUS PRODUCT MUST BE DISPOSED OF, MANUFACTURER'S OR LOCAL AND STATE RECOMMENDED METHODS FOR PROPER DISPOSAL WILL BE FOLLOWED.

PRODUCT SPECIFIC PRACTICES
THE FOLLOWING PRODUCT SPECIFIC PRACTICES WILL BE FOLLOWED ONSITE:

PETROLEUM PRODUCTS

ALL ONSITE VEHICLES WILL BE MONITORED FOR LEAKS AND RECEIVE REGULAR PREVENTIVE MAINTENANCE TO REDUCE THE CHANCE OF LEAKAGE. PETROLEUM PRODUCTS WILL BE STORED IN TIGHTLY SEALED CONTAINERS WHICH ARE CLEARLY LABELED. ANY ASPHALT SUBSTANCES USED ONSITE WILL BE APPLIED ACCORDING TO THE MANUFACTURER'S RECOMMENDATIONS.

FERTILIZERS

FERTILIZERS USED WILL BE APPLIED ONLY IN THE MINIMUM AMOUNTS RECOMMENDED BY THE MANUFACTURER. ONCE APPLIED, FERTILIZER WILL BE WORKED INTO THE SOIL TO LIMIT EXPOSURE TO STORM WATER. STORAGE WILL BE IN A COVERED AREA. THE CONTENTS OF ANY PARTIALLY USED BAGS OF FERTILIZER WILL BE TRANSFERRED TO A SEALABLE PLASTIC BIN TO AVOID SPILLS.

PAINTS

ALL CONTAINERS WILL BE TIGHTLY SEALED AND STORED WHEN NOT REQUIRED FOR USE. EXCESS PAINT WILL NOT BE DISCHARGED TO THE STORM SEWER SYSTEM BUT WILL BE PROPERLY DISPOSED OF ACCORDING TO MANUFACTURERS' INSTRUCTIONS OR STATE AND LOCAL REGULATIONS.

CONCRETE TRUCKS

CONCRETE TRUCKS WILL NOT BE ALLOWED TO WASH OUT OR DISCHARGE SURPLUS CONCRETE OR DRUM WASH WATER ON THE SITE.

SPILL CONTROL PRACTICES

IN ADDITION TO THE GOOD HOUSEKEEPING AND MATERIAL MANAGEMENT PRACTICES DISCUSSED IN THE PREVIOUS SECTIONS OF THIS PLAN, THE FOLLOWING PRACTICES WILL BE FOLLOWED FOR SPILL PREVENTION AND CLEANUP:

MANUFACTURERS' RECOMMENDED METHODS FOR SPILL CLEANUP WILL BE CLEARLY POSTED ON SITE AND SITE PERSONNEL WILL BE MADE AWARE OF THE PROCEDURES AND THE LOCATION OF THE INFORMATION AND CLEANUP SUPPLIES.

MATERIALS AND EQUIPMENT NECESSARY FOR SPILL CLEANUP WILL BE KEPT IN THE MATERIAL STORAGE AREA ONSITE. EQUIPMENT AND MATERIALS WILL INCLUDE BUT NOT BE LIMITED TO BROOMS, DUST PANS, MOPS, RAGS, GLOVES, GOGGLES, LIQUID ABSORBENT (i.e. KITTY LITTER OR EQUAL), SAND, SAWDUST, AND PLASTIC AND METAL TRASH CONTAINERS SPECIFICALLY FOR THIS PURPOSE.

ALL SPILLS WILL BE CLEANED UP IMMEDIATELY AFTER DISCOVERY.

THE SPILL AREA WILL BE KEPT WELL VENTILATED AND PERSONNEL WILL WEAR APPROPRIATE PROTECTIVE CLOTHING TO PREVENT INJURY FROM CONTACT WITH A HAZARDOUS SUBSTANCE.

SPILL OF TOXIC OR HAZARDOUS MATERIAL WILL BE REPORTED TO THE APPROPRIATE STATE OR LOCAL GOVERNMENT AGENCY, REGARDLESS OF THE SIZE OF THE SPILL.

THE SPILL PREVENTION PLAN WILL BE ADJUSTED TO INCLUDE MEASURES TO PREVENT THIS TYPE OF SPILL FROM REOCCURRING AND HOW TO CLEAN UP THE SPILL IF THERE IS ANOTHER ONE. A DESCRIPTION OF THE SPILL, WHAT CAUSED IT, AND THE CLEANUP MEASURES WILL ALSO BE INCLUDED.

THE SITE SUPERINTENDENT RESPONSIBLE FOR THE DAY-TO-DAY SITE OPERATIONS, WILL BE THE SPILL PREVENTION AND CLEANUP COORDINATOR. HE/SHE WILL DESIGNATE AT LEAST ONE OTHER SITE PERSONNEL WHO WILL RECEIVE SPILL PREVENTION AND CLEANUP TRAINING. THESE INDIVIDUALS WILL EACH BECOME RESPONSIBLE FOR A PARTICULAR PHASE OF PREVENTION AND CLEANUP. THE NAMES OF RESPONSIBLE SPILL PERSONNEL WILL BE POSTED IN THE MATERIAL STORAGE AREA AND IF APPLICABLE, IN THE OFFICE TRAILER ONSITE.

MAINTENANCE/INSPECTION PROCEDURES

EROSION AND SEDIMENT CONTROL INSPECTION AND MAINTENANCE PRACTICES

THE FOLLOWING ARE INSPECTION AND MAINTENANCE PRACTICES THAT WILL BE USED TO MAINTAIN EROSION AND SEDIMENT CONTROLS.

* NO MORE THAN 10 ACRES OF THE SITE WILL BE DENUDED AT ONE TIME WITHOUT WRITTEN PERMISSION FROM THE ENGINEER.
* ALL CONTROL MEASURES WILL BE INSPECTED BY THE SUPERINTENDENT, THE PERSON RESPONSIBLE FOR THE DAY TO DAY SITE OPERATION OR SOMEONE APPOINTED BY THE SUPERINTENDENT, AT LEAST ONCE A WEEK AND FOLLOWING ANY STORM EVENT OF 0.25 INCHES OR GREATER.
* ALL TURBIDITY CONTROL MEASURES WILL BE MAINTAINED IN GOOD WORKING ORDER; IF A REPAIR IS NECESSARY, IT WILL BE INITIATED WITHIN 24 HOURS OF REPORT.
* BUILT UP SEDIMENT WILL BE REMOVED FROM SILT FENCE WHEN IT HAS REACHED ONE-THIRD THE HEIGHT OF THE FENCE.
* SILT FENCE WILL BE INSPECTED FOR DEPTH OF SEDIMENT, TEARS, TO SEE IF THE FABRIC IS SECURELY ATTACHED TO THE FENCE POSTS, AND TO SEE THAT THE FENCE POSTS ARE FIRMLY IN THE GROUND.
* THE SEDIMENT BASINS WILL BE INSPECTED FOR THE DEPTH OF SEDIMENT, AND BUILT UP SEDIMENT WILL BE REMOVED WHEN IT REACHES 10 PERCENT OF THE DESIGN CAPACITY OR AT THE END OF THE JOB, WHICHEVER COMES FIRST.
* DIVERSION DIKES/SWALES WILL BE INSPECTED AND ANY BREACHES PROMPTLY REPAIRED.
* TEMPORARY AND PERMANENT SEEDING AND PLANTING WILL BE INSPECTED FOR BARE SPOTS, WASHOUTS, AND HEALTHY GROWTH.
* A MAINTENANCE INSPECTION REPORT WILL BE MADE AFTER EACH INSPECTION. A COPY OF THE REPORT FORM TO BE COMPLETED BY THE INSPECTOR IS ATTACHED.
  THE REPORTS WILL BE KEPT ON SITE DURING CONSTRUCTION AND AVAILABLE UPON REQUEST TO THE OWNER, ENGINEER OR ANY FEDERAL, STATE OR LOCAL AGENCY APPROVING SEDIMENT AND AND EROSION PLANS, OR STORM WATER MANAGEMENT PLANS.
  THE REPORTS SHALL BE MADE AND RETAINED AS PART OF THE STORM WATER POLLUTION PREVENTION PLAN FOR AT LEAST THREE YEARS FROM THE DATE THAT THE SITE IS FINALLY STABILIZED AND THE NOTICE OF TERMINATION IS SUBMITTED THE REPORTS SHALL IDENTIFY ANY INCIDENTS OF NON-COMPLIANCE.
* THE SITE SUPERINTENDENT WILL SELECT UP TO THREE INDIVIDUALS WHO WILL BE RESPONSIBLE FOR INSPECTIONS, MAINTENANCE AND REPAIR ACTIVITIES, AND FILLING OUT THE INSPECTION AND MAINTENANCE REPORT.
* PERSONNEL SELECTED FOR INSPECTION AND MAINTENANCE RESPONSIBILITIES WILL RECEIVE TRAINING FROM THE SITE. SUPERINTENDENT. THEY WILL BE TRAINED IN ALL THE INSPECTION AND MAINTENANCE PRACTICES NECESSARY FOR KEEPING THE EROSION AND SEDIMENT CONTROLS USED ONSITE IN GOOD WORKING ORDER.

NON-STORM WATER DISCHARGES

IT IS EXPECTED THAT THE FOLLOWING NON-STORM WATER DISCHARGES WILL OCCUR FROM THE SITE DURING THE CONSTRUCTION PERIOD:

* WATER FROM WATER LINE FLUSHING
* PAVEMENT WASH WATERS (WHERE NO SPILLS OR LEAKS OF TOXIC OR HAZARDOUS MATERIALS HAVE OCCURRED).
* UNCONTAMINATED GROUNDWATER (FROM DEWATERING EXCAVATION).

ALL NON-STORM WATER DISCHARGES WILL BE DIRECTED TO THE SEDIMENT BASIN PRIOR TO DISCHARGE.

CONTRACTOR'S CERTIFICATION

I CERTIFY UNDER PENALTY OF LAW THAT I UNDERSTAND THE TERMS AND CONDITIONS OF THE GENERAL NATIONAL POLLUTANT DISCHARGE ELIMINATION SYSTEM (NPDES) PERMIT THAT AUTHORIZES THE STORM WATER DISCHARGES ASSOCIATED WITH INDUSTRIAL ACTIVITY FROM THE CONSTRUCTION SITE IDENTIFIED AS PART OF THIS CERTIFICATION.

RESPONSIBLE FOR/DUTIES	GENERAL CONTRACTOR	SUB-CONTRACTOR	SUB-CONTRACTOR	SUB-CONTRACTOR	SUB-CONTRACTOR
BUSINESS NAME AND ADDRESS OF CONTRACTOR & ALL SUBS					
SIGNATURE					

TOCOI Engineering, LLC
714 NORTH ORANGE AVENUE, GREEN COVE SPRINGS, FL 32043
PH: 904-215-1388 E.B. NUMBER: 26383

ENGINEER OF RECORD
CHARLES SOHM

FLORIDA
REGISTRATION NUMBER:
79289

TYLER PLAZA WEST
FOR
TYLER PLAZA WEST, LLC

SWPPP CONTRACTOR REQUIREMENTS

REVISIONS

PLOT DATE:
DRAWN BY:
DESIGNED BY:
CHECKED BY:
SCALE:
JOB NO.:

SHEET NO.
24

Date: 11/10/23 Time: 10:54 AM DWG Name: \\TE-GCS\01-Projects\21-470 Tyler West Plaza 2021\03-CADD\09_21-470 SWPPP CONTRACTOR REQUIREMENTS.dwg Layout: 24

PROJECT:

STORM WATER POLLUTION PREVENTION PLAN
INSPECTION AND MAINTENANCE REPORT FORM

TO BE COMPLETED EVERY 7 DAYS AND WITHIN 24 HOURS OF
A RAINFALL EVENT OF 0.25 INCHES OR MORE

INSPECTOR:_____ DATE:_____

INSPECTOR'S QUALIFICATIONS:
_____
_____
_____
_____

DAYS SINCE LAST RAINFALL:_____ AMOUNT OF LAST RAINFALL _____ INCHES

STABILIZATION MEASURES

INSPECTION AREA (DESCRIPTION OF LOCATION)	DATE SINCE LAST DISTURBED	DATE OF NEXT DISTURBANCE	STABLIZED ? (YES/NO)	STABILIZED WITH	CONDITION

STABILIZATION REQUIRED:
_____
_____
_____
_____

TO BE PERFORMED BY:_____ ON OR BEFORE:_____

PAGE 1 OF 4

PROJECT:

STORM WATER POLLUTION PREVENTION PLAN
INSPECTION AND MAINTENANCE REPORT FORM

STRUCTURAL CONTROLS

DATE:_____

EARTH DIKES/SWALES

DIKE OR SWALE	FROM	TO	IS DIKE/SWALE STABILIZED ?	IS THERE EVIDENCE OF WASHOUT OR OVERTOPPING

MAINTENANCE REQUIRED FOR EARTH DIKE/SWALE:
_____
_____
_____
_____

TO BE PERFORMED BY:_____ ON OR BEFORE:_____

CATCH BASIN/CURB INLET/OUTFALL TURBIDITY CONTROLS

STRUCTURE/ OUTFALL	ARE TURBIDITY CONTROLS IN PLACE	ANY EVIDENCE OF CLOGING/WASHOUT OR BYPASSING ?	ARE TURBIDITY CONTROLS IN NEED OF REPLACING	DOES SILT NEED TO BE REMOVED FROM AROUND CONTROL

MAINTENANCE REQUIRED FOR CATCH BASIN/CURB INLETS/OUTFALLS TURBIDITY CONTROLS:
_____
_____
_____
_____

TO BE PERFORMED BY:_____ ON OR BEFORE:_____

PAGE 2 OF 4

PROJECT:

STORM WATER POLLUTION PREVENTION PLAN
INSPECTION AND MAINTENANCE REPORT FORM

SEDIMENT BASIN

DEPTH OF SEDIMENT IN BASIN	DEPTH OF SEDIMENT SIDE BASIN	ANY EVIDENCE OF OVERTOPPING OF THE EMBANKMENT ?	CONDITION OF OUTFALL FROM SEDIMENT BASIN

MAINTENANCE REQUIRED FOR SEDIMENT BASIN:
_____
_____
_____
_____

TO BE PERFORMED BY:_____ ON OR BEFORE:_____

OTHER CONTROLS

STABILIZED CONSTRUCTION ENTRANCE

DOES MUCH SEDIMENT GET TRACKED ON TO ROAD ?	IS THE GRAVEL CLEAN OR IS IT FILLED WITH SEDIMENT?	DOES ALL TRAFFIC USE THE STABILIZED ENTRANCE TO LEAVE THE SITE ?	IS THE CULVERT BENEATH THE ENTRANCE WORKING? (IF APPLICABLE)

MAINTENANCE REQUIRED FOR STABILIZED CONSTRUCTION ENTRANCE:
_____
_____
_____

TO BE PERFORMED BY:_____ ON OR BEFORE:_____

PAGE 3 OF 4

PROJECT:

STORM WATER POLLUTION PREVENTION PLAN
INSPECTION AND MAINTENANCE REPORT FORM

CHANGES REQUIRED TO THE POLLUTION PREVENTION PLAN:
_____
_____
_____
_____
_____
_____
_____
_____
_____
_____

REASONS FOR CHANGES:
_____
_____
_____
_____
_____
_____
_____
_____
_____
_____
_____

I CERTIFY UNDER PENALTY OF LAW THAT THIS DOCUMENT AND ALL ATTACHMENTS WERE PREPARED UNDER MY DIRECTION OR SUPERVISION IN ACCORDANCE WITH A SYSTEM DESIGNED TO ASSURE THAT QUALIFIED PERSONNEL PROPERLY GATHERED AND EVALUATED THE INFORMATION SUBMITTED. BASED ON MY INQUIRY OF THE PERSON OR PERSONS WHO MANAGE THE SYSTEM, OR THOSE PERSONS DIRECTLY RESPONSIBLE FOR GATHERING THE INFORMATION, THE INFORMATION SUBMITTED IS, TO THE BEST OF MY KNOWLEDGE AND BELIEF, TRUE, ACCURATE, AND COMPLETE. I AM AWARE THAT THERE ARE SIGNIFICANT PENALTIES FOR SUBMITTING FALSE INFORMATION, INCLUDING THE POSSIBILITY OF FINE AND IMPRISONMENT FOR KNOWING VIOLATIONS.

SIGNATURE:_____

DATE:_____

PAGE 4 OF 4

NOTE TO CONTRACTOR:
THIS IS THE CONTRACTORS CERTIFICATION REQUIRED BY THE EPA'S NATIONAL POLLUTION DISCHARGE ELIMINATION SYSTEM (NPDES), STORM WATER POLLUTION PREVENTION PLAN FOR CONSTRUCTION SITES OVER 5 ACRES. THIS CERTIFICATION MUST BE COMPLETED WEEKLY AND AFTER EVERY RAINFALL EVENT OVER 0.25 INCHES. IT IS SUGGESTED THAT THIS SHEET BE REMOVED FROM THE PLAN SET AND DUPLICATED AS NEEDED BY THE CONTRACTOR.